Locksets

5300 Series

ANSI/BHMA Type E8291 (Grade1)
(with cylinder)

Interior Pull,
for all 5300
Series Locksets

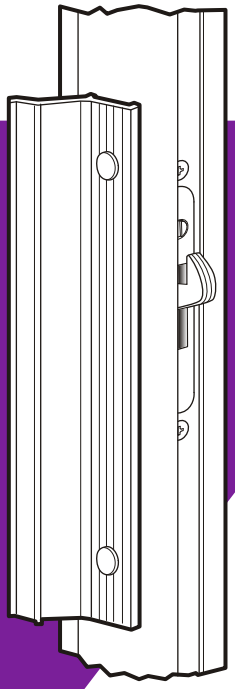

Exterior 5302

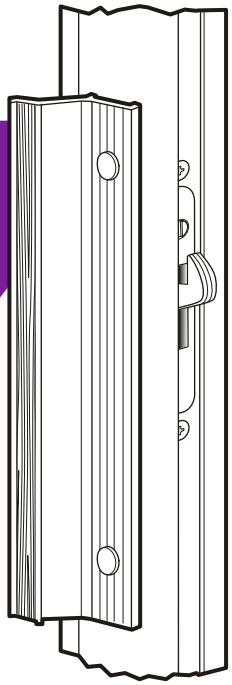

Exterior 5303

Function

5300 Series Locksets offer a choice of two different exterior pulls, a genuine walnut interior grip-pull and the security of the MS1847 deadlock.

Anti-Lift Lock Mechanism

Basic MS1848-09 (radius ends) or MS1848-10 (square ends) is supplied. Stainless steel bolt is self-protecting, adjustable for reach.

Inside Operation

Thumbturn projects or retracts deadlock bolt.

Trim Finish

All pulls are extruded aluminum with 628 (US28) Clear Anodized finish. For other finishes, contact factory.

Cylinder Kit 5325

Any 5300 Series Lockset can be equipped with a cylinder block on the exterior pull. 5325 kits are available from stock with Schlage or Weiser Keyway cylinders. Installation of other makes may require modification to the cylinder, pull and/or cylinder block. Consult Adams Rite factory representative for assistance.

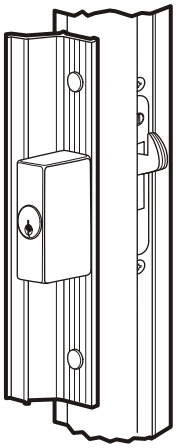

Adams Rite
ASSA ABLOY

260 Santa Fe Street
Pomona, California 91767
(800) 872-3267 Fax:(800) 232-7329
www.adamsrite.com

5300 Series Locksets

DIMENSIONS

INCHES
MILLIMETERS
Nominal, subject to tolerance extremes.

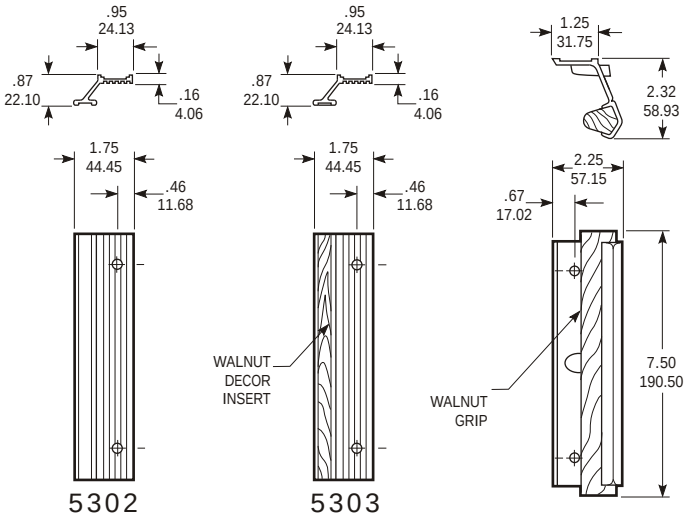

5302 5303
Exterior Pulls

Interior Pull

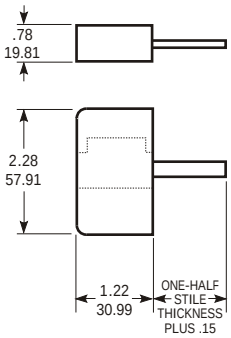

5325 Cylinder Kit

INSTALLATION

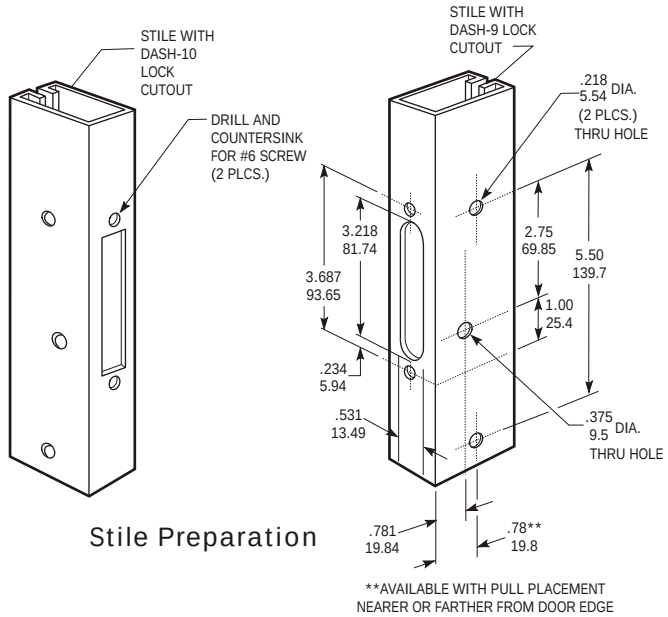

Stile Preparation

**AVAILABLE WITH PULL PLACEMENT
NEARER OR FARTHER FROM DOOR EDGE

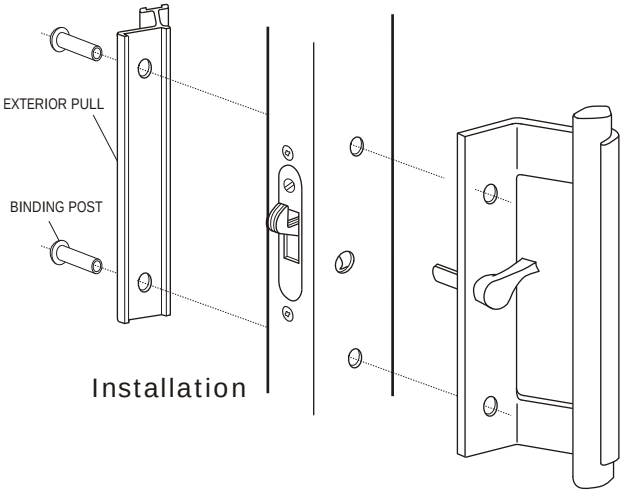

Installation

HOW TO ORDER

Specify quantity and the following information.
Order Cylinder Kit separately.
Specify Part No.5325 plus Dash number for stile thickness.

Lockset Styling (Exterior Pull)	Lock Shape	Stile Thickness (See Table)
5302 Standard 5303 W/Walnut Insert	09 Radius 10 Square	

5302 - 09 - 01

FIRST DASH NO.	
LOCK SHAPE	
-09 RADIUS	-10 SQUARE

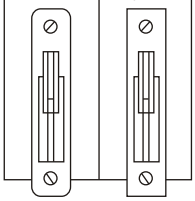

SECOND DASH NO.		Indicates Stile Thickness	
DASH	THICKNESS	DASH	THICKNESS
-01	7/8 22.22	-06	1-1/2 38.10
-02	1 25.40	-07	1-5/8 41.27
-03	1-1/8 28.57	-08	1-3/4 44.45
-04	1-1/4 31.75	-09	1-7/8 47.62
-05	1-3/8 34.92	-10	2 50.80

OPTIONS

Exterior pull of 5303 has a walnut grain vinyl insert. Matching dummy sets available. Order 5325 cylinder kit separately.

©2008 ADAMS RITE MANUFACTURING CO.