McKinney®

ASSA ABLOY

Transfer Device Solutions

Hardwiring Made Easy®

LynX® ELECTRO

ASSA ABLOY, the global leader in door opening solutions

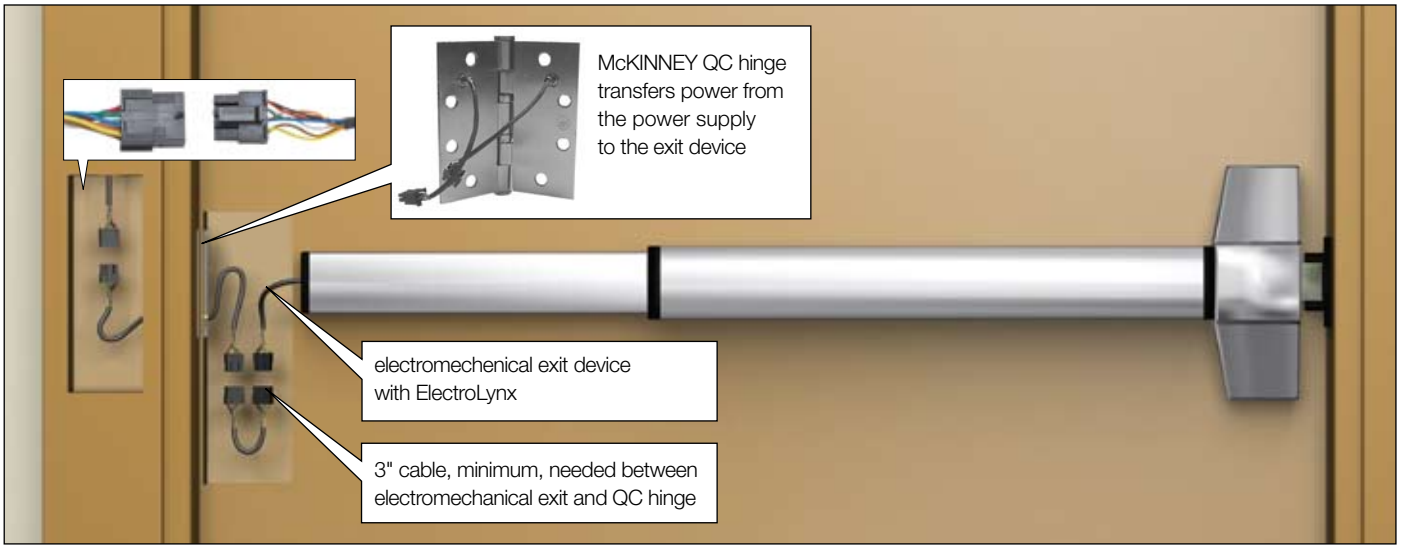

Contents

About ElectroLynx 3
Transfer Device Decision Tree 4
Hinge Wiring Requirement
CORBIN RUSSWIN 7
YALE 7
SARGENT 7
ElectroLynx Cables
Special 4
Standard 4
McKINNEY Hinges, Concealed Circuit
QC Hinge 5
PoE Hinge 6
Aluminum Continuous 8
Stainless & Steel Continuous 8
Door Cord and EPT 9
Service Kit and Tools 10
Standard Pinout Colors 11

How ElectroLynx® Helps

To answer the demand for “smart” electronic access control and locking solutions that require fast, easy, and cost-effective installation, ASSA ABLOY Group brands use the ElectroLynx standardized plug-in connectors and color-coded wiring system. With ElectroLynx, doorway components come pre-wired for easy hookup to the power source. Key to the system is the transfer device hinge that carries power from the frame to the locking hardware.

Overview:

- Makes it easy to bring power to the locking hardware
- Wires have connectors that snap together, like plugging a telephone into a jack
- Developed by ASSA ABLOY and rapidly becoming the industry standard

Key Benefits of ElectroLynx Include:

- Fast, fool-proof, and future-proof installations
- Easy upgrades and retrofitting while maintaining fire rating
- Snap-together Molex® connectors ensure proper connections
- No need to match up wires, create connections or drill holes in the door or frame
- Concealed wiring preserves aesthetics of the opening

Hardwiring Made Easy®

As part of their promise to provide innovative, fast and effective high security solutions to their customers, ASSA ABLOY Group companies offer ElectroLynx®, a universal quick-connect system that simplifies the electrification of the door opening.

ElectroLynx® is a registered trademark of ASSA ABLOY Inc.

Plug-and-Play

McKINNEY hinges and RIXSON pivots can have ElectroLynx® connectors to transfer power from the incoming source through to the electrified hardware. The only hardwiring is from the building's wiring system to the opening.

All ElectroLynx retrofit cables are 12 conductor, supplied with an 8-pin connector and a 4-pin connector. If you are utilizing only 8-pin conductors or less, you can cut off the excess 4-pin conductor connectors.

- Pre-wired doors from CECO DOOR, CURRIES, BARON and GRAHAM have special harnesses built in to house the wiring components.
- ElectroLynx is offered on the electrified hardware products of ADAMS RITE, CORBIN RUSSWIN, HES, RIXSON, SARGENT, SECURITRON and YALE

1. 15'2" ElectroLynx cable from hinge location to ceiling
2. Electric hinge or pivot bridges the power from the frame to the door
3. In-the-door wiring harness brings power to the locking hardware or exit device
4. Locking hardware or exit device comes pre-wired with connectors

Pre-wired Doors

The ElectroLynx system inside a door and frame includes a one-piece pre-fabricated wiring harness equipped with Molex connectors. The wiring harness consists of 8-pin and 4-pin ElectroLynx connectors with 22 gauge wire. It is an efficient labor-saving alternative to using conduit inside a door, which requires installation of wires at the job site.

In addition to standard doors, fire rated doors from ASSA ABLOY companies - BARON, CECO DOOR, CURRIES and GRAHAM - are also available with ElectroLynx cabling.

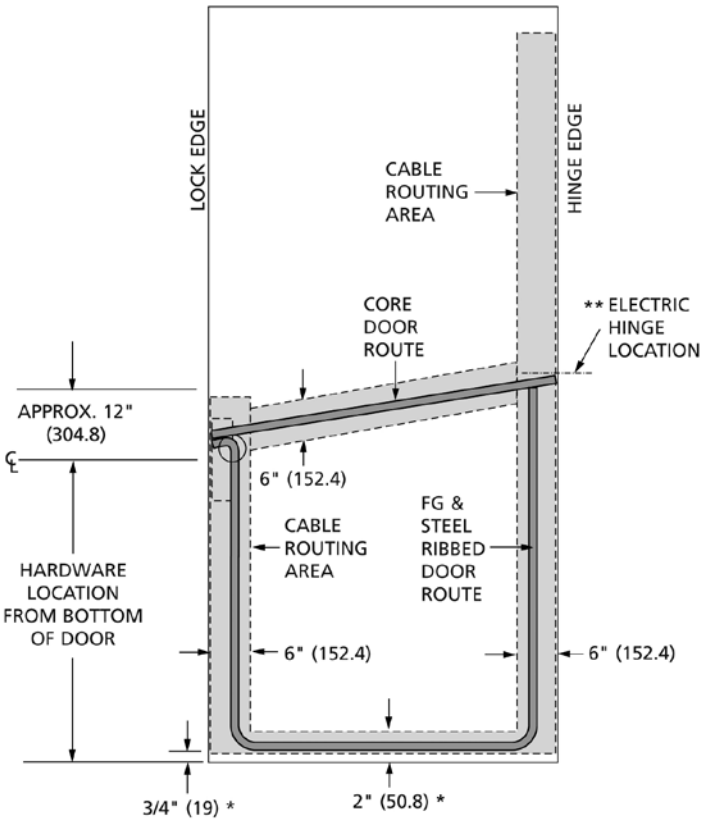

If you are not ordering ASSA ABLOY Door Group doors with the ElectroLynx cable pre-installed in the door, you must order an ElectroLynx retrofit cable to go between ANY hardware and the hinge. This includes 3" cables to go from the hinge to an exit device and up to a 15' cable to go up and around a full lite metal door. To ensure you order the correct ElectroLynx connecting cables, follow these steps:

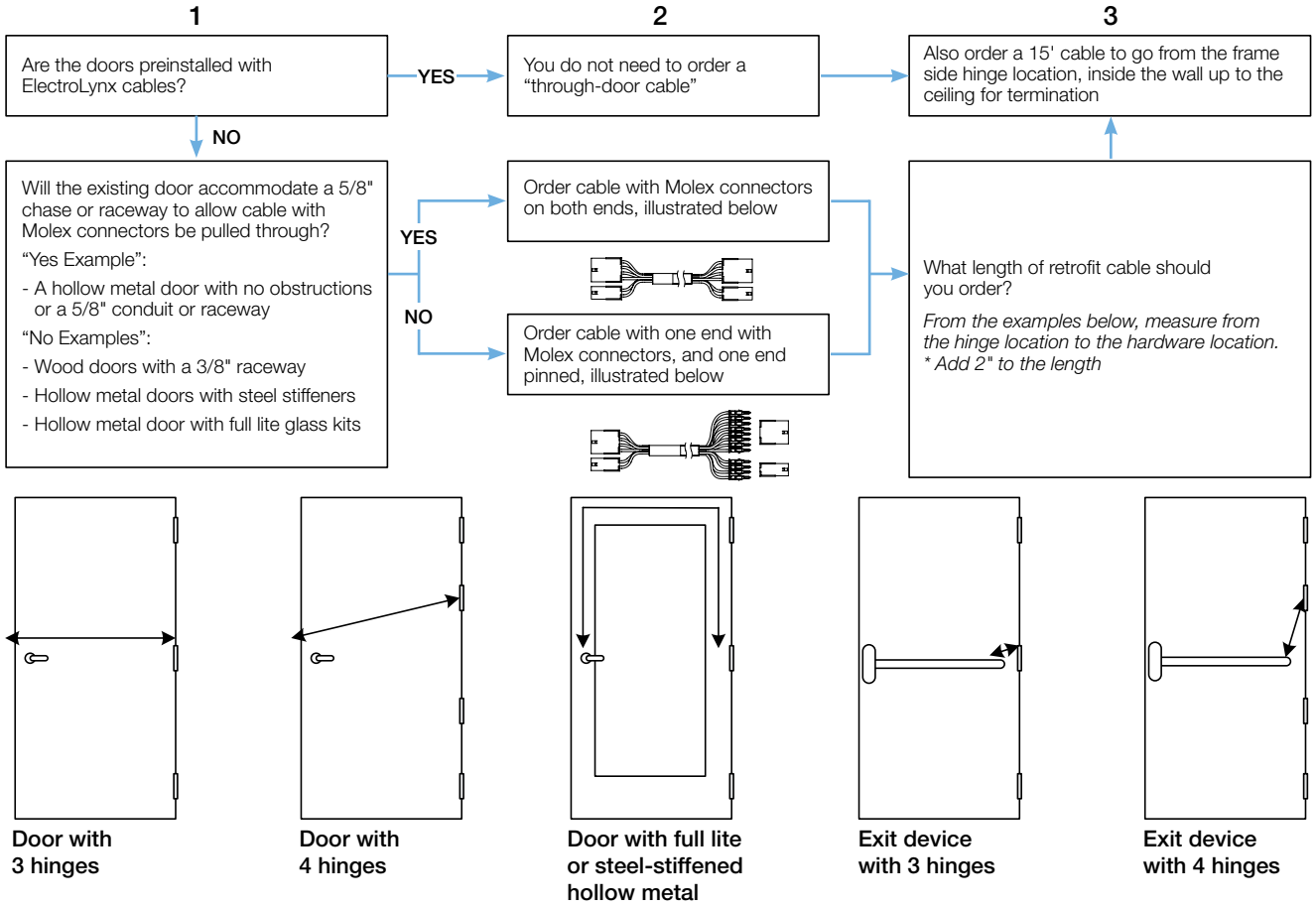

Standard ElectroLynx Retrofit Cable Sizes

	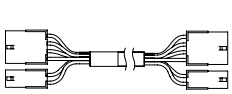	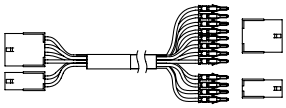	
Actual Cable Length	**12 Conductor and Molex both ends**	**12 Conductor and Molex one end, pinned one end**	**Typical Application**
3"	QC-C003	QC-C003P	Between hinge and the end of an exit device.
6"	QC-C006	QC-C006P	
12"	QC-C012	QC-C012P	
26"	QC-C200	QC-C200P	Between hinge and through the door to the lockset or exit device trim.
32"	QC-C206	QC-C206P	
38"	QC-C300	QC-C300P	
44"	QC-C306	QC-C306P	
50"	QC-C400	QC-C400P	
15' 2"	QC-C1500	QC-C1500P	From the hinge location, up the jamb to above the ceiling, or up and around full lite or half lite metal door.

McKINNEY QC Concealed Circuit Electric Hinges

The McKINNEY ElectroLynx® hinge is an intermediate connector that passes a constant flow of current between the source of power (jamb) and the actuated devices in the door (electric locks, exit devices, etc.) regardless of door position. Each hinge features concealed plug connectors that eliminate the need for separate or exposed wiring. Brass eyelets add protection and durability to the ElectroLynx hinge and common wire colors and standard connectors make installation quick and simple. Once installed, it will give no outward indication of its function and will transmit power efficiently and reliably, as long as the wire capacity is not exceeded.

All ElectroLynx hinges are factory tested and specially packaged to minimize against damage during shipment. Installation instructions are packed with each hinge. 28 Gauge multi-strand wires are used. A 6" pigtail is provided for connection to the source wiring, and additional 6" pigtails may be requested. The wire colors are with the electromechanical hardware of other ASSA ABLOY brands.

- An 8 position connector is used for QC2, QC4 QC6 and QC8 wire hinges
- An 8 position and 4 position connector is used for QC12 wire hinges
- QC2, 4 or 6 hinges are available for special applications, but are not used with the decision tree found on page 4

Please call 1-800-810-WIRE (9473) if you are in doubt regarding hinge requirements.

c UL us LISTED

QC12

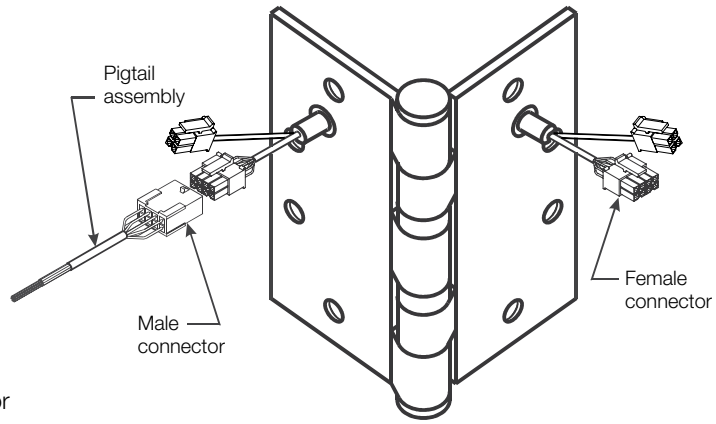

Back of 12 wire hinge shown

Available up to 12 wires

- Rated 4 amp continuous @ 24 volts AC or DC, 16 amp pulse for 300 milliseconds (cycle time not less than 5 seconds), 10 amp pulse for 250 milliseconds (cycle time not less than 5 seconds)
- Optional MG-16 mortar guard available (mortar guard required on steel frames)
- Steel and Stainless Steel QC hinges are UL listed for use up to and including 3 hour rated openings
- QC2 wire hinges provided with 8 position connector for new construction, specify QC2

* Consult customer service for availability

How to order string

4½X4½ TA2714 26D QC12

3- Knuckle	5- Knuckle
TA314	TA2314
TA714	T4A3386
TA386	T4A3786
TA786	TA2895
	T4A3395
	T4A3795

Full Mortise QC hinges are available in most BHMA and McKINNEY powder coat finishes

McKINNEY ElectroLynx Power over Ethernet (PoE) Hinge

The McKINNEY ElectroLynx PoE, the next phase of Quick Connect hinge products by McKINNEY, provides for the passing of Ethernet data through the door opening. Installation is a snap with the friendly "plug and play" connectors which allow power to be linked from the incoming source through the door to the electrified hardware. PoE data is bidirectional.

Brass eyelets add protection and durability to the PoE hinge which features common wire colors coordinated to work with intelligent Power over Ethernet electromechanical hardware from SARGENT and CORBIN RUSSWIN.

The PoE hinge should be installed in the second from bottom hinge position on the door. Once installed, it will give no outward indication of its function and will transfer power and data efficiently and reliably, as long as the wire capacity is not exceeded.

All PoE hinges are factory tested and specially packaged to minimize damage during shipment. Installation instructions are packed with each hinge. Along with the PoE hinge, mating PoE door and frame side harnesses are required, to complete the opening. The required PoE harnesses must be ordered separately (see below for detail).

Specify suffix PoE. Consult factory for the availability of additional finishes and hinge types.

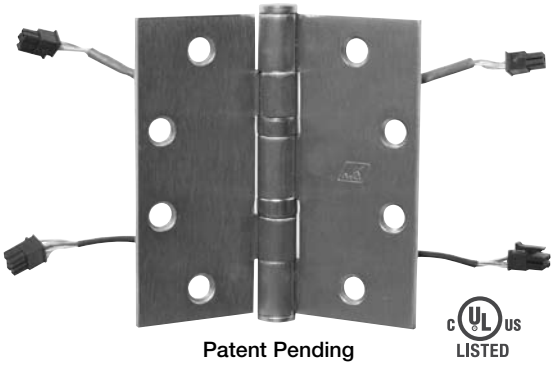

Patent Pending

c UL us LISTED

Power over Ethernet Hinge Features

Each hinge features two 6-position and two 4-position Molex connectors, 9 multistrand wires; 2 twisted pairs (26 AWG), 4 straight conductors (28 gauge) and 1 straight conductor (22 AWG) with concealed plug connectors that eliminate the need for separate or exposed wiring. Rated 350 mA continuous @ 48 volts DC nominal, the hinge is capable of two PoE wiring configurations:

1. Power over Data (5 wire); Power and Data supplied together over the 2 twisted (26 AWG) pairs and the 22 AWG conductor is used for the earth ground connection.
2. Data with Power over spares (9 wire); Data over 2 twisted (26 AWG) pairs with Power over spare pairs (4 straight 28 AWG conductors) and the 22 Awg conductor is used for the earth ground connection.

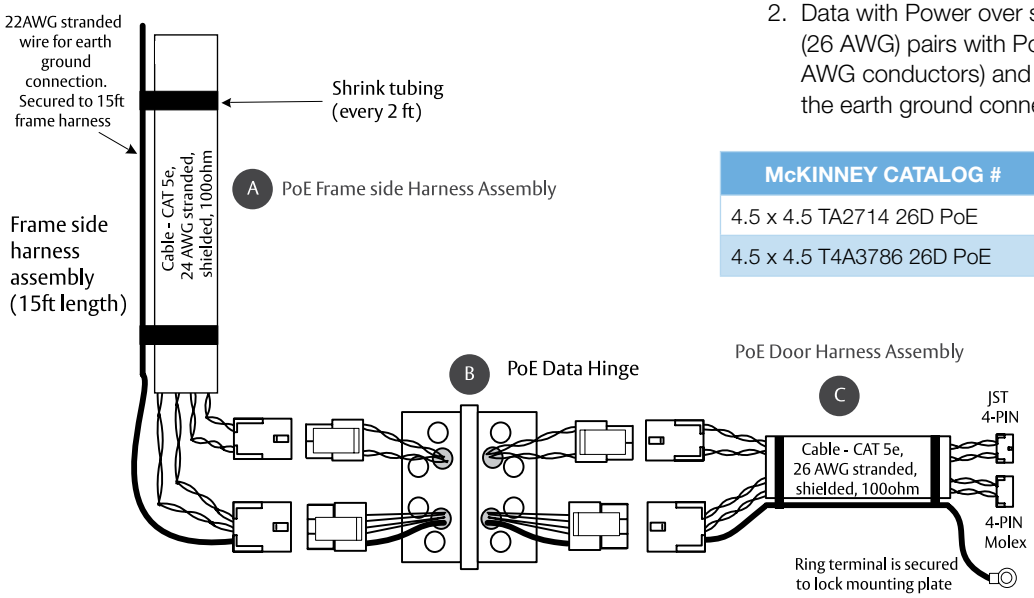

McKINNEY CATALOG #	Description:
4.5 x 4.5 TA2714 26D PoE	Standard Weight 5 Knuckle
4.5 x 4.5 T4A3786 26D PoE	Heavy Weight 5 Knuckle

NOTES:

The PoE door & frame harnesses can accommodate a variety of new (with raceway) and retrofit applications.

Connectors are small enough to run through a 3/8" (min.) stile-to-stile door raceway.

Connects to intelligent Power over Ethernet electromechanical hardware from SARGENT and CORBIN RUSSWIN.

Standard ElectroLynx Power over Ethernet (PoE) Harnesses

Harness Length	McKINNEY Catalog #	Door Side Application
30"	PoE-C206P	20" to 25" door width (doors with 3 butt hinges with PoE hinge in center to stile to stile raceway to lock prep).
36"	PoE-C300P	26" to 31" door width (doors with 3 butt hinges with PoE hinge in center to stile to stile raceway to lock prep).
42"	PoE-C306P	32" to 36" door width (doors with 3 butt hinges with PoE hinge in center to stile to stile raceway to lock prep).
48"	PoE-C400P	37" to 42" door width (doors with 3 butt hinges with PoE hinge in center to stile to stile raceway to lock prep).
54"	PoE-C406P	43" to 48" door width (doors with 3 butt hinges with PoE hinge in center to stile to stile raceway to lock prep).
Frame Side Application		
180"	PoE-C1500P	From the hinge location, up the jamb to wall/ceiling

Hinge Wiring Requirements

CORBIN RUSSWIN	Hinge
Access Control Products - All Device Types	
Access 600 Series RNE1	QC12
Access 800 Series NE1	QC8
Access 800 Series AC2 (Hard Powered)	QC8
Cylindrical Locksets CL3300 Series	
All Functions	QC8
Mortise Locksets ML20900 Series	
All Functions / Options	QC8
Electrified Exit Devices ED5000 / ED4000	
All Functions / Options (Exception M93, M61)	QC8
M93 (Latch Bolt Monitor) Alone or in combination with any other option	QC12
M61 (Alarmed Exit with M35 Hardwired Option)	QC12
Electrified Exit Trim 9900 Series	
All functions / Options	QC8

SARGENT	Hinge
Access Control Products - All Device Types	
Harmony Series	QC12
Profile Series v.N1	QC8
Profile Series v.G1.5 (Hard Powered)	QC8
Cylindrical Locksets 10 Line / 8 Line	
All Functions / Options	QC8
Mortise Locksets 8200 Series	
All Functions / Options (Exception LX, DX)	QC8
LX (Latchbolt Monitor)	QC12
DX (Deadbolt Monitor)	QC12
Electrified Exit Devices 80 Series	
All Functions / Options (Exception 56-, TL-, 59-, AL-)	QC8
56- (Electronic Latch Retraction) Timer Function Only	QC12
TL- (Electro-Luminescent)	QC12
59- (Electroguard Delayed Egress) Remote Alarm, Latchbolt Mon.	QC12
AL- (Alarmed Exit with 546 Harness - Hardwired Option)	QC12
Electrified Exit Trim 700 Series	
All functions / Options	QC8
Electrified Exit Devices AND Electrified Trim Combination	
All Options with All Trim (Exception 56-, TL-, 59-, AL-, 54-)	QC12
56- (Electronic Latch Retraction) Timer Function Unavailable	QC12
TL- (Electro-Luminescent) Unavailable	QC12
59- (Electroguard Delayed Egress) Remote Alarm, Latchbolt Unavailable	QC12
AL- (Alarmed Exit) Remote Reset and Door Position inputs Unavailable	QC12
54- (Trim Monitor Switch) Normally Closed Switch option Unavailable	QC12

YALE	Hinge
Access Control Products - All Device Types	
Symphony Series	QC12
eBoss Series (Hard Powered)	QC8
Cylindrical Locksets 5400LN / 5300LN Series	
All Functions / Options	QC8
Mortise Locksets 8800 Series	
All Functions / Options (Exception LBM, DBM)	QC8
LBM (Latchbolt Monitor)	QC12
DBM (Deadbolt Monitor)	QC12
Electrified Exit Devices 7000 Series	
All Functions / Options (Exception O, A)	QC8
O (Latch Bolt Monitor) Alone or in combination with any other option	QC12
A (Alarmed Exit with HW Hardwired Option)	QC12
Electrified Exit Trim 600 Series	
All functions / Options	QC8

McKINNEY Aluminum Continuous Electrified Hinges

The McKINNEY electrified continuous hinge is furnished with bonded, 4-conductor flat cable with connectors at each leaf. Two options allow variable degrees of service to be performed at the specific location of current carrying cables via either a removable 8" or a pivoting 8" section of the hinge. Both of these options, SER and ACC are available as 4, 8 or 12 wire configurations on our Full Mortise Aluminum Continuous Hinges.

Serviceable/Removable (SER) - The hinge is furnished to be installed in three sections, allowing the current carrying cables to be serviced or replaced without removing the door from the frame. Additionally the SER option allows the current carrying cables to be safely stored or delivered to the electrician or security contractor prior to the installation of the electrified hardware, eliminating the necessity of the electrician or security contractor being present when the doors are being hung.

Accessible (ACC) – The hinges are furnished to be installed in a single section with each leaf modified to pivot at the location of the current carrying cables and allow access to the cables and connected wiring. Electrical modification is in the center of the hinge.

Features:

- Performance tested 1,250,000 cycles with the 4-conductor flat cable
- Each 4-conductor cable carries 4 amps @ 24volts with a 16 amp inrush current for 300 milliseconds
- Each hinge is provided with a 4 amp in-line fuse to protect the cable from any overload or surge in power
- Flat cable conductor is warranted for 5 years
- Hinges are handed
- Available on full mortise aluminum continuous hinges
- Each electrical prep is supplied with a 48" and 96" wire harness
- ElectroLynx HC-6/4 or HC-6/8 pigtails are included in pack for installation with other ASSA ABLOY ElectroLynx products
- Electrical modification meets new SDI location at center of hinge
- Standardized prep locations on 83", 85", 95" and 120" hinges

c UL us LISTED

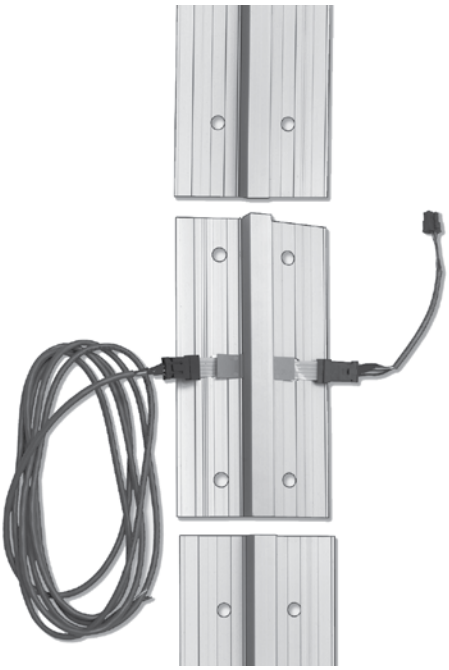

Serviceable "SER" option shown

McKINNEY Stainless Steel Pin & Barrel Continuous Electrified Hinges

Features:

- The McKINNEY EL option is available on FM300, FM3500 and FM3700 edge mount hinges (not available on raised barrel applications)
- 14 Gauge, type 304 stainless steel, features .25 diameter stainless pin
- Symmetrically templated hole pattern
- FM300 & FM3700 Supports weight up to 600 lbs.; FM3500 supports up to 900 lbs. (maximum 4'0" door width)
- Hinges are handed
- Optional ETAP electrical transfer prep available
- Available in 4, 8 or 12 wire configurations

c UL us LISTED

EL Concealed Current Transfer (Standard Prep Locations)

For McK-FM300, McK-FM3500, McK-FM3700
EL-4 Qty (4) 28 Gauge Wires
EL-8 Qty (8) 28 Gauge Wires
EL-12 Qty (12) 28 Gauge Wires

Door Cord and Electrical Transfer (EPT)

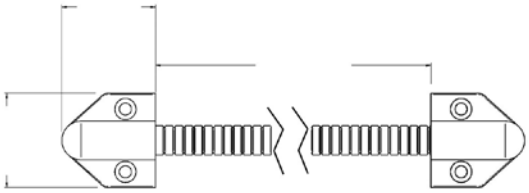

McK-EPT Electrical Power Transfer

- Installs in the door and frame edges
- Accepts a thick cable and protects it within a flexible steel shield
- Device that will work on most doors hung using butt hinges, continuous hinges or pivots
- Will not function on a center pivot door

How to Order

Part Number	Description
McK-EPT	Electrical power transfer
McK-EPTL	Electrical power transfer, long
McK-EL-EPT	ElectroLynx EPT -12 wire
McK-EL-EPTL	ElectroLynx EPTL -12 wire

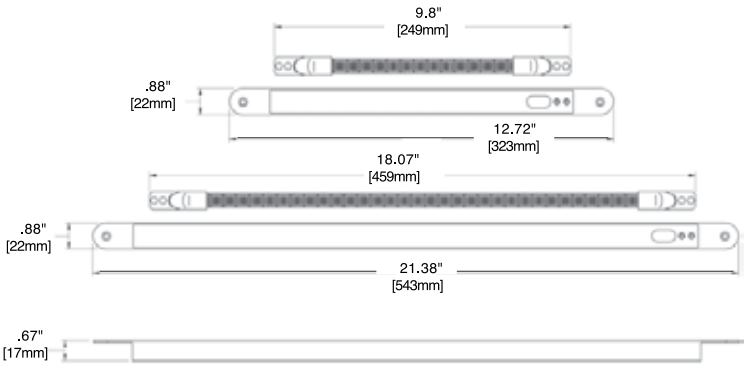

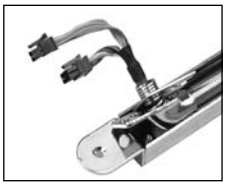

EPT can be ordered with ElectroLynx by specifying McK-EL-EPT or McK-EL-EPTL.

McK-TSB-C Door Cord

- Simplest and most economical solution for power transfer
- Consists of an 18" or 36" armored stainless steel cable and plastic end pieces in light gray and black
- Cable has an interior diameter of .25"
- Supports interior wire cables up to .2"

How to Order

Part Number	Description
McK-TSB-C	Door cord with gray/black caps 18" cord
McK-TSB-CXL	Door cord with gray/black caps 36" cord

Service Kit and Tools

QC-R001 Service Kit

The service kit includes a quantity of every different type of connector and terminal required for repairing product connections/ terminations or pinning wires on certain retrofit harnesses. Contains 10 each 2, 4, 8 molex receptacles and plugs as well as corresponding terminals, extraction tool and pinning assembly guide.

Miscellaneous Parts	Part Number	Description
1 bag (100 pc)	QC-RF2	Female receptacle (2ckt)
1 bag (100 pc)	QC-RF4	Female receptacle (4ckt)
1 bag (100 pc)	QC-RF8	Female receptacle (8ckt)
1 bag (100 pc)	QC-RM2	Male plug (2ckt)
1 bag (100 pc)	QC-RM4	Male plug (4ckt)
1 bag (100 pc)	QC-RM8	Male plug (8ckt)
1 bag (100 pc)	QC-FT2024	Female terminal (AWG 20-24)
1 bag (100 pc)	QC-FT2630	Female terminal (AWG 26-30)
1 bag (100 pc)	QC-MT2024	Male terminal (AWG 20-24)
1 bag (100 pc)	QC-MT2630	Male terminal (AWG 26-30)
1 bag (10 pc)	QC-DCC	Pinning assembly guide

QC-R003 Molex Hand Crimp Tool

The crimp tool is required for adding Molex terminals (connector pins) to wires used with ElectroLynx products.

The tool is intended for low volume, or repair requirements only.

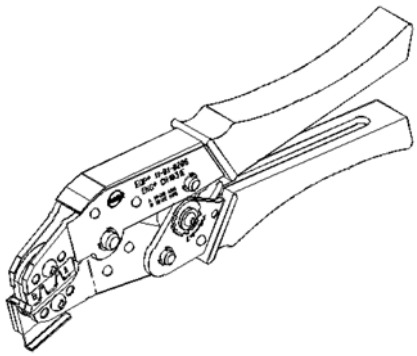

QC-R002 Extraction Tool

The extraction tool is a simple hand tool used to remove damaged terminals from an ElectroLynx female receptacle or male plug.

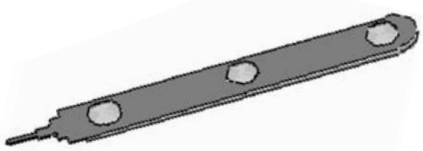

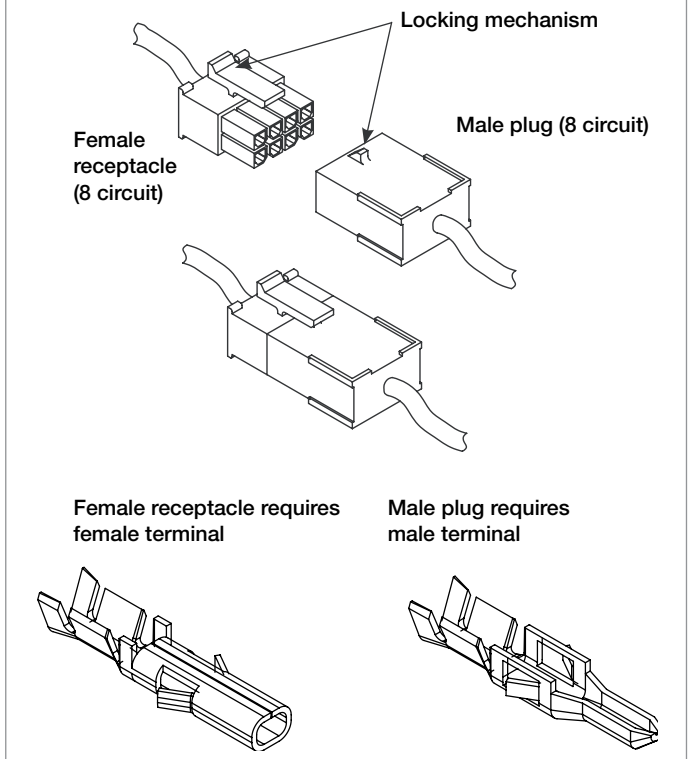

The plug and receptacle connectors are designed to mate and lock together as shown in the figure. Plug the connectors onto each other with the locking mechanism aligned as indicated.

QC-DCC Pinning Assembly Guide

Included with every pinned conductor to aid in wire assembly.

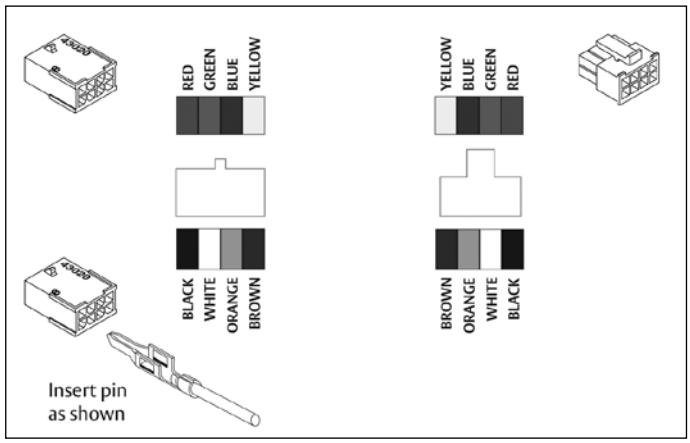

ASSA ABLOY Standard Pinout Colors

2 Thru 8 Wire

Connection Pin	Color Wire
1	Black
2	Red
3	White
4	Green
5	Orange
6	Blue
7	Brown
8	Yellow

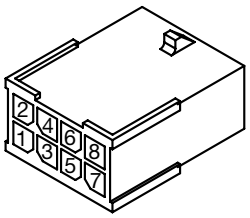

10 Thru 12 Wire

Connection Pin	Color Wire
1- #9	Violet
2- #10	Gray
3- #11	Pink
4- #12	Tan

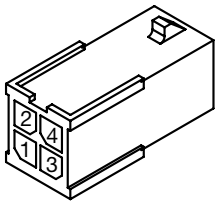

NOTE: Door and frame should be prepared per the proper hinge template before installing the hinge.

Wire Specifications:

28 Ga. stranded w/PTFE insulation, NEMA HP-3. Each conductor is colored differently for ease of identification.

Electrical Rating:

4 amp continuous @ 24 volts AC or DC, 16 amp pulse for 300 msec. (cycle time not less than 5 sec.), 10 amp pulse for 250 msec. (cycle time not less than 5 sec.)

Location:

The QC Hinge should be located in the second from the bottom hinge preparation on the door and frame.

NOTE: Hinges with up to 8 wires will have an 8 position connector on them. If there are more than 8 and up to 12 wires there will be a 4 position connector in addition to the 8 position connector.

McKINNEY Products Company • 225 Episcopal Road • Berlin • CT 06037 • Phone: 800.346.7707 • Fax: 800.541.1073
ASSA ABLOY Door Security Solutions Canada • 160 Four Valley Drive • Vaughan, Ontario • L4K 4T9 • Tel: 905.738.2466 • Fax: 905.738.2678 • www.assaabloy.ca

Founded in 1864, McKINNEY Products Company is a market leader in the manufacture of quality architectural grade hinges including security hinges, and continuous hinges for the builders' hardware industry.

Copyright © 2009, McKinney Products Company, an ASSA ABLOY Group company. All rights reserved.
Reproduction in whole or in part without the express written permission of McKinney Products Company is prohibited.

ASSA ABLOY is the global leader in door opening solutions, dedicated to satisfying end-user needs for security, safety and convenience.

51415 10/09