SDC Security Door Controls
3580 Willow Lane, Westlake Village, CA 91361-4921 • (805) 494-0622 • Fax: (805) 494-8861
www.sdcsecurity.com • E-mail: service@sdcsecurity.com

INSTALLATION WIRE DIAGRAMS
UR2A/4A UNIVERSAL ACCESS HARDWARE CONTROLLER

The UR2A and UR4A Universal Controller modules provide an economical and efficient method for controlling two, three or four doors. The UR boards may be used with SDC Power Supplies or stand alone in a junction box. These boards provide a central point for all access wiring which simplifies the installation process and assists system trouble shooting. These modules provide a DIP switch selection of several operating modes. The UR2A/UR4A board operates on 12 VDC or 24 VDC without field adjustment. The UR4A is a four (4) station controller board (Outputs: A, B, C, D) that provides one (1) Fused SPDT Dry contact output, one (1) Non-fused SPDT Dry contact output, and two (2) Control Inputs per station. Additionally there are four (4) Auxiliary Inputs that can control the outputs. The UR2A is a two (2) station version with all of the features of the UR4A for control of two (2) doors.

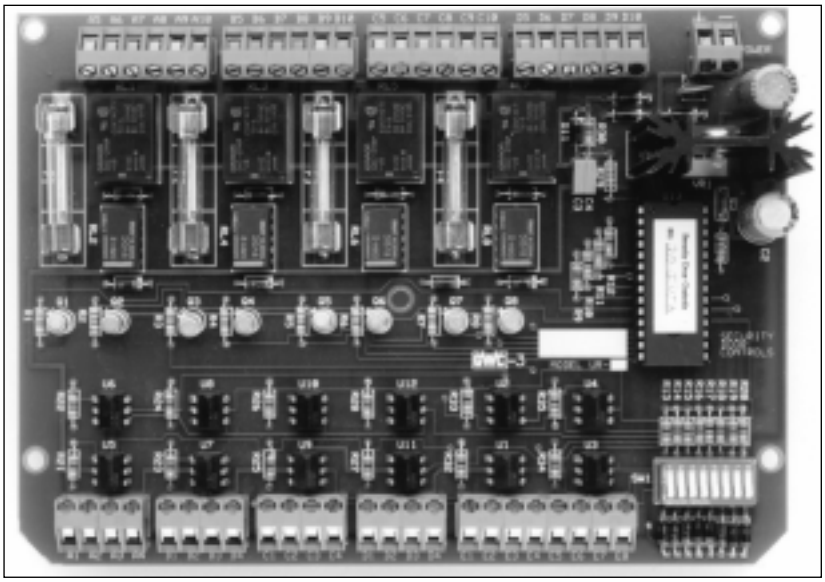

UR2A/4A Field Selectable Operation

(See Table 1 for Mode DIP Switch Settings)

TD - Time Delay Relay (1 to 35 seconds)
LR - Latching Relay
TD/LR - Time Delay and Latching Relay
CR - Control Relay
Interlock "A" - Doors normally Closed and Unlocked
Mantrap "B" - Doors normally Closed and Locked

In the TD Mode a momentary switch closure across the Access Input unlocks the specific door for the amount of time (1 to 35 seconds) set on DIP switches SW5-7. In the LR Mode a momentary switch closure will lock or unlock the door for an extended period of time. In the TD/LR mode the two Access Inputs provide for a timed unlock (1 to 35 seconds) and a latched unlock. In the CR Mode the specific door unlocks for as long as a switch closure is maintained across the Access Input. The UR2A/4A provides a choice of two Standard Interlock functions: 1.) Interlock "A" with doors normally closed and unlocked. 2.) Mantrap "B" with doors normally closed and locked. The unlock time (1 to 35 seconds) for the doors in the Mantrap "B" mode is set by DIP switches SW5-7. For both Interlocks "A" and "B", opening any door makes the other doors incapable of being unlocked.

Features

- All Twelve (12) Inputs of the UR4A are Optically Isolated.
- DIP Switch Selectable functions: TD, LR, TD/LR, CR, and two Interlocks "A" & "B"
- Screw terminals are provided to simplify the wiring of two or four doors.

Benefits

- Optical isolation increases system reliability and noise immunity.
- Allows customer definable control of one to four doors. Eliminates custom programming charges.
- UR2A/4A board provides a central point for wiring which reduces installation time and aids trouble shooting.

Inputs

The UR4A has twelve (12) Optically isolated Dry contact inputs. Eight (8) Inputs are arranged as two (2) Inputs for each of the four (4) Outputs. The remaining four (4) Auxiliary Inputs are used for control functions. The UR2A has a total of eight (8) Inputs, two (2) for each Output plus four (4) Auxiliary Inputs.

Outputs

The UR4A has four (4) Outputs (A,B,C, and D) and each Output provides one (1) set of high current (5 Amp) fused SPDT Dry contacts and one (1) set of low current (1 Amp) non-fused SPDT Dry contacts. The UR2A is a two Output version of the UR4A for controlling two (2) doors.

Engineering Support and Custom Programming

If you have a unique application, SDC Engineering can help you design it and provide a custom programmed UR2A/4A to meet your requirements.

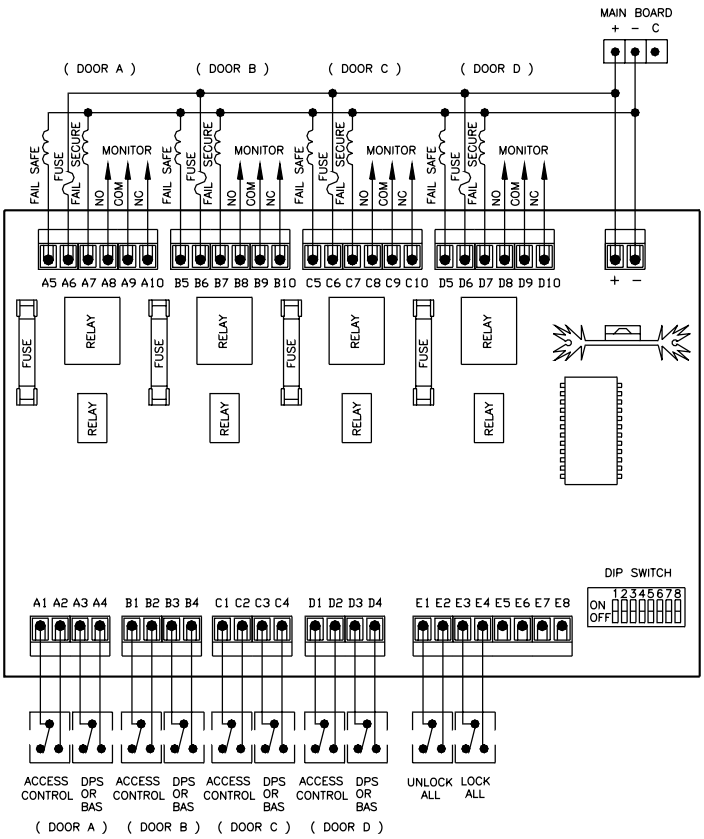

Example: Mantrap "B": 10 second Unlock Time. Switch settings*: SW2 & SW6 = ON SW1, SW3, SW4, SW5, SW7 & SW8 = OFF. See Table 1 and the UR2A/4A Installation Instructions for DIP switch settings for other selectable operating modes.

Figure 1 - UR2A/4A Typical Interlock "B" Wiring Connections for Fail Safe and Fail Secure Locks.

Table 1 - Mode DIP Switch Settings *

Control Mode SW8 = ON

SW1	On=TD/LR	Off=CR	Door A
SW2	On=TD/LR	Off=CR	Door B
SW3	On=TD/LR	Off=CR	Door C
SW4	On=TD/LR	Off=CR	Door D
SW5	On=5 Sec.	Off=0	
SW6	On=10 Sec.	Off=0	
SW7	On=20 Sec.	Off=0	

TD Mode time switch settings (SW5-7) are additive. Min. Time = 1 Sec. Max. time = 35 Sec.

Interlock Mode SW8 = OFF

SW1	On=Interlock "A" Mode Doors A,B,C,D	
SW2	On=Mantrap "B" Mode Doors A,B,C,D	
SW3	Not Used	
SW4	Not Used	
SW5	On = 5 Sec.	Off = 0
SW6	On = 10 Sec.	Off = 0
SW7	On = 20 Sec.	Off = 0

Mantrap "B" unlock time switch settings (SW5-7) are additive. Min. time = 1 Sec., Max. time = 35 Sec.

*Note: The UR2A/4A switch settings are subject to product improvement changes and revisions to the controller program. Please refer to the UR2A/4A Installation Instructions that are shipped with each unit.

UR2A Electrical Specifications

UR2A (2) Fused Outputs, SPDT Dry contacts; 5 Amp @ 30VDC
(2) Non-fused Outputs, SPDT Dry contacts; 1 Amp @ 30VDC
(2) Inputs per Station, (4) Total Inputs; plus (4) Auxiliary Inputs
Supply Voltage: 12 VDC or 24 VDC, +/- 10%.
Supply Current: 0.28 Amp Typ; 0.35 Amp Max.

UR4A Electrical Specifications

UR4A (4) Fused Outputs, SPDT Dry contacts; 5 Amp @ 30 VDC
(4) Non-Fused Outputs, SPDT Dry contacts; 1 Amp @ 30 VDC
(2) Inputs per Station, (8) Total Inputs; plus (4) Auxiliary Inputs
Supply Voltage: 12 VDC or 24 VDC, +/- 10%

UR2A/4A Dimensions

7" L x 5" W x 1-5/8" H (177.8mm L x 127mm W x 41.3mm H)

Ordering Information

The UR2A/4A can be mounted in a junction box or installed as an optional board in any SDC 600 Series Power Supply. (Models 622 through 626, 631A and 631RFA).

SDC Part Numbers: UR2A 2 Station Controller
UR4A 4 Station Controller

FOR POWER WIRE SIZE SEE WIRE CHART
ALL SIGNAL WIRES MUST BE 20 AWG OR LARGER.

POWER WIRES
SIGNAL WIRES

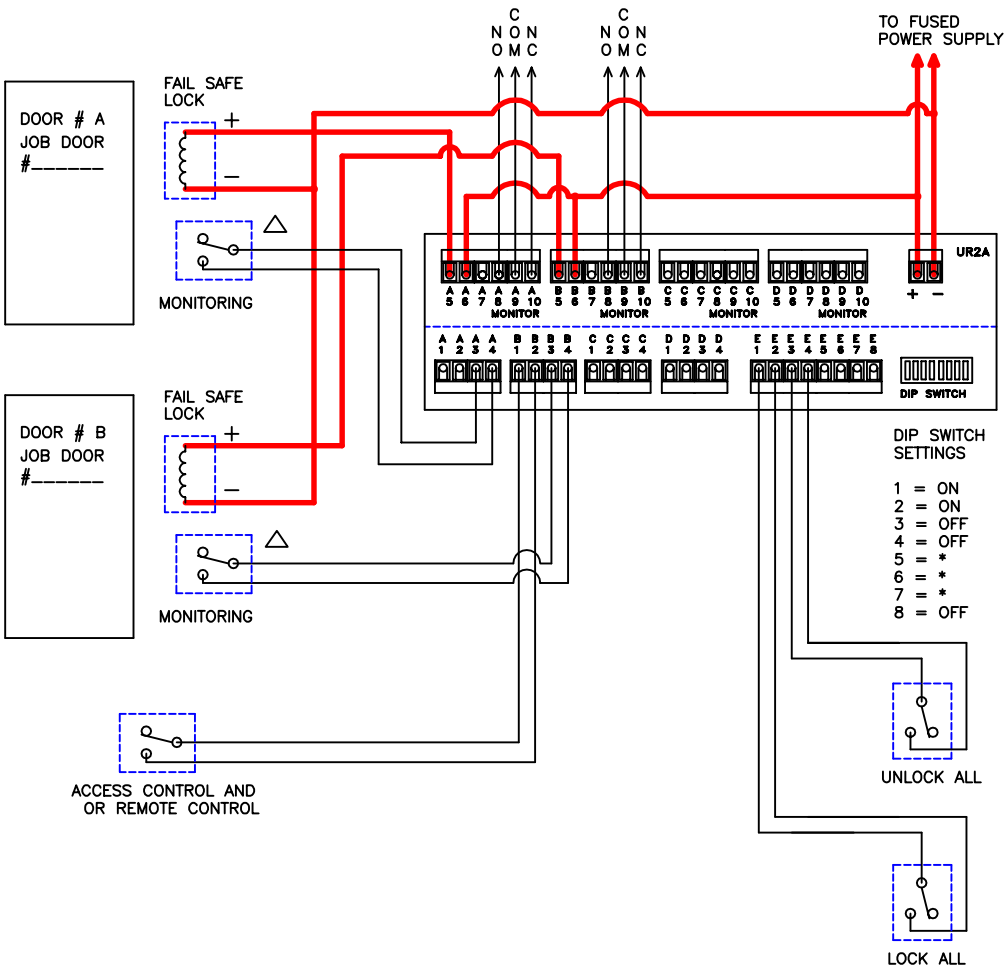

*TABLE 4 – MODE DIP SWITCH SETTINGS
INTERLOCK MODE SW8 = OFF
SW1 ON
SW2 ON
SW3 NOT USED
SW4 NOT USED
SW5 ON = 5 SEC. OFF = 0
SW6 ON = 10 SEC. OFF = 0
SW7 ON = 20 SEC. OFF = 0
INTERLOCK "C" UNLOCK TIME SWITCH SETTINGS (SW5–7)
ARE ADDITIVE. MIN. TIME = 1 SEC. MAX. TIME = 35 SEC.

POWER WIRES
SIGNAL WIRES

△ SWITCHES SHOWN WITH DOOR CLOSED

DOOR "A" IS CLOSED AND UNLOCKED. DOOR 'B' IS CLOSED AND LOCKED.
OPENING DOOR "A" WILL MAKE DOOR "B" INCAPABLE OF BEING UNLOCKED.
UNLOCKING AND OR OPENING DOOR "B" WILL LOCK DOOR "A"

ALL WIRING MUST FIRST BE REVIEWED AND APPROVED BY THE PROJECT ENGINEER ASSIGNED TO THE LOCATION FOR IT'S CORRECTNESS AND SUITABILITY FOR THE APPLICATION IN THE LOCATION WHERE THE EQUIPMENT IS TO BE INSTALLED.

SDC SECURITY DOOR CONTROLS

TITLE
UR2A TYPICAL WIRING INTERLOCK "C" FOR FAIL SAFE LOCKS

DRN BY.	D.M.	REV.	DWG/S.O. NO.
CHKD BY.		–	2790
ORIGINATION DATE. 7–2–97			

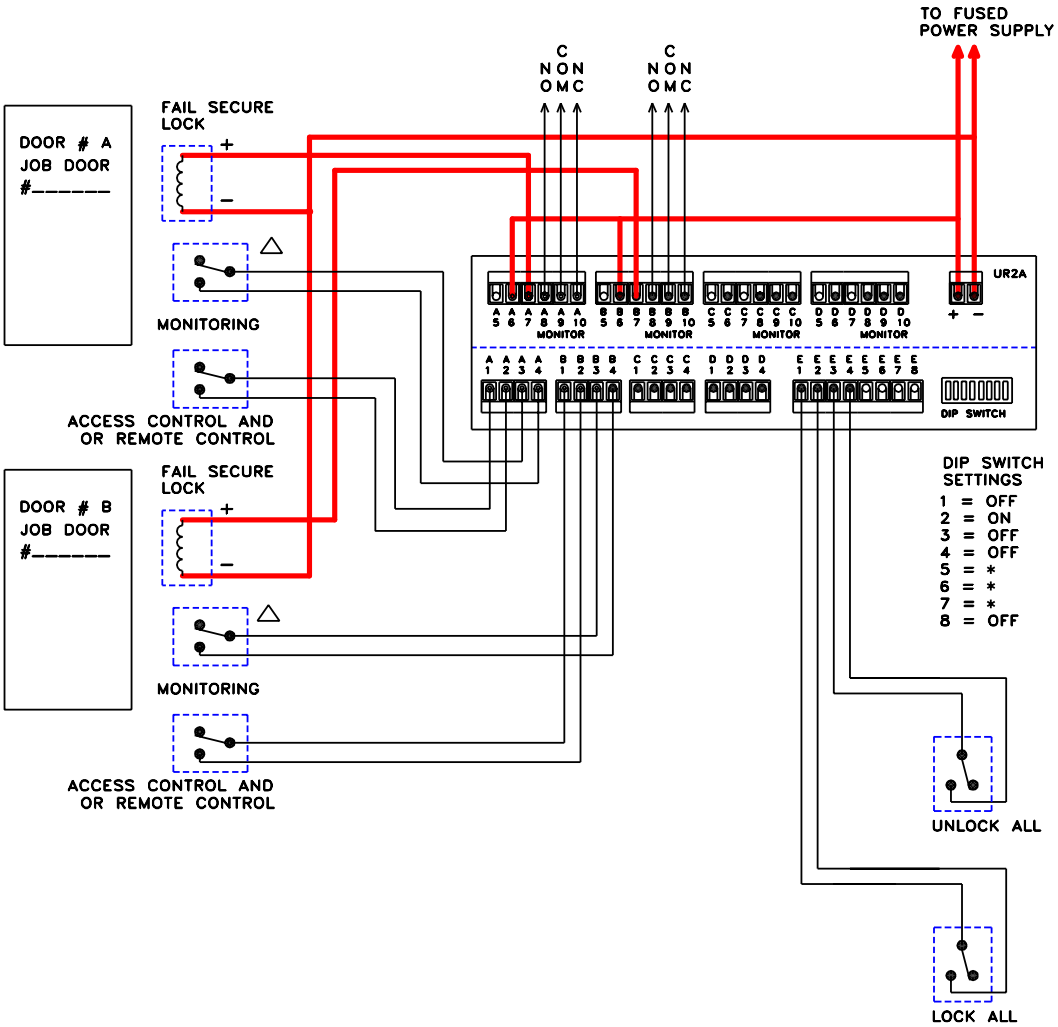

FOR POWER WIRE SIZE SEE WIRE CHART
ALL SIGNAL WIRES MUST BE 20 AWG OR LARGER.

POWER WIRES
SIGNAL WIRES

*TABLE 4 – MODE DIP SWITCH SETTINGS
INTERLOCK MODE SW8 = OFF
SW1 ON = INTERLOCK "A" MODE DOORS A, B
SW2 ON = MANTRAP "B" MODE DOORS A, B
SW3 NOT USED
SW4 NOT USED
SW5 ON = 5 SEC. OFF = 0
SW6 ON = 10 SEC. OFF = 0
SW7 ON = 20 SEC. OFF = 0
MANTRAP "B" UNLOCK TIME SWITCH SETTINGS (SW5-7)
ARE ADDITIVE. MIN. TIME = 1 SEC. MAX. TIME = 35 SEC.

△ SWITCHES SHOWN WITH DOOR CLOSED

ALL DOORS REMAIN CLOSED AND LOCKED. UNLOCKING EITHER DOOR CAUSES THE OTHER DOOR(S) TO BE INCAPABLE OF BEING UNLOCKED.

ALL WIRING MUST FIRST BE REVIEWED AND APPROVED BY THE PROJECT ENGINEER ASSIGNED TO THE LOCATION FOR IT'S CORRECTNESS AND SUITABILITY FOR THE APPLICATION IN THE LOCATION WHERE THE EQUIPMENT IS TO BE INSTALLED.

SDC SECURITY DOOR CONTROLS	TITLE UR2A TYPICAL WIRING MANTRAP B FOR FAIL SECURE LOCKS	DRN BY. D.M. CHKD BY. ORIGINATION DATE. 7-2-97	REV. A	DWG/S.O. NO. 2790

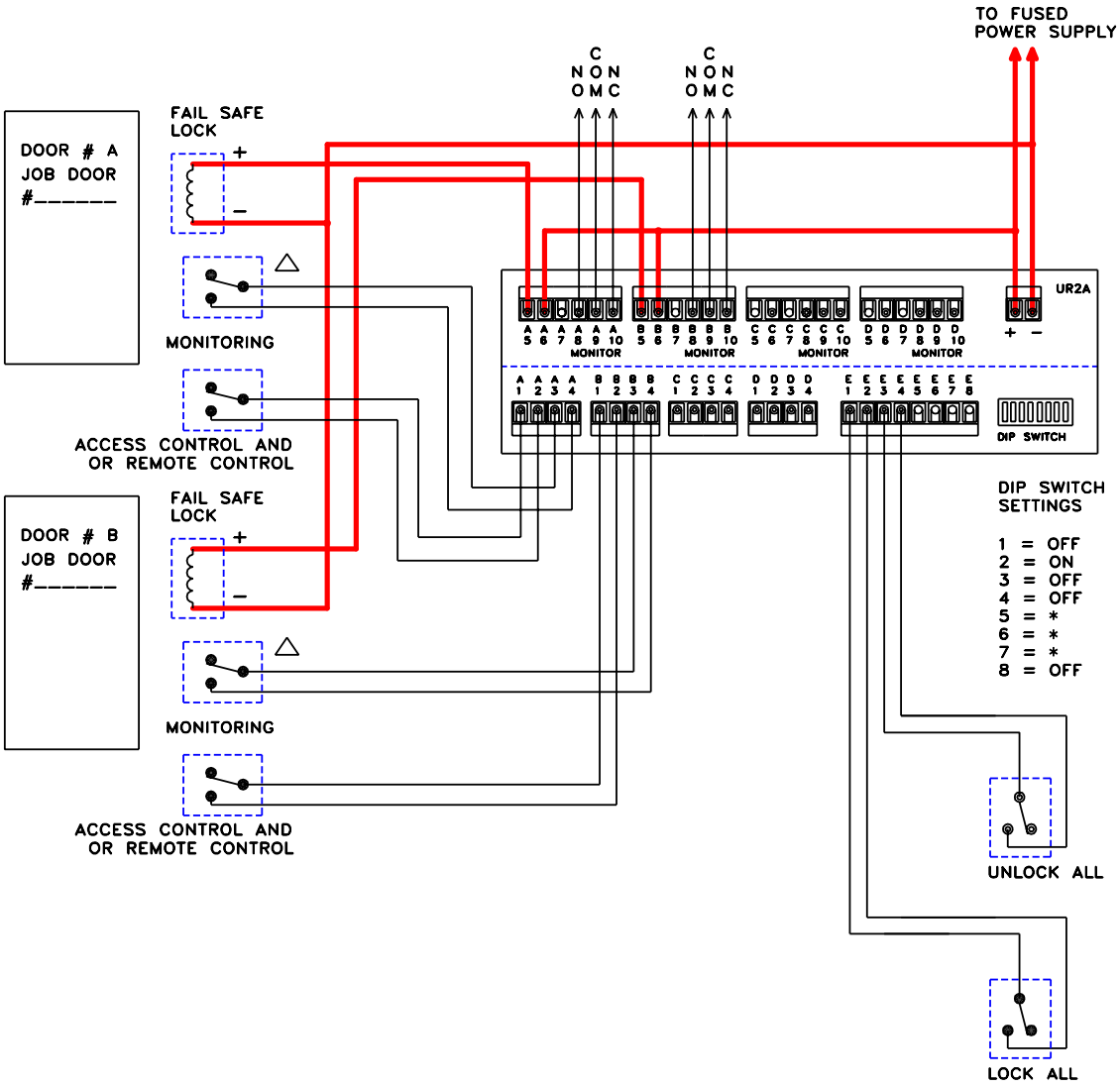

DIP SWITCH SETTINGS

1 = OFF
2 = ON
3 = OFF
4 = OFF
5 = *
6 = *
7 = *
8 = OFF

FOR POWER WIRE SIZE SEE WIRE CHART
ALL SIGNAL WIRES MUST BE 20 AWG OR LARGER.

POWER WIRES
SIGNAL WIRES

*TABLE 4 – MODE DIP SWITCH SETTINGS
INTERLOCK MODE SW8 = OFF
SW1 ON = INTERLOCK "A" MODE DOORS A, B
SW2 ON = MANTRAP "B" MODE DOORS A, B
SW3 NOT USED
SW4 NOT USED
SW5 ON = 5 SEC. OFF = 0
SW6 ON = 10 SEC. OFF = 0
SW7 ON = 20 SEC. OFF = 0
MANTRAP "B" UNLOCK TIME SWITCH SETTINGS (SW5–7) ARE ADDITIVE. MIN. TIME = 1 SEC. MAX. TIME = 35 SEC.

△ SWITCHES SHOWN WITH DOOR CLOSED

ALL DOORS REMAIN CLOSED AND LOCKED. UNLOCKING EITHER DOOR CAUSES THE OTHER DOOR(S) TO BE INCAPABLE OF BEING UNLOCKED.

ALL WIRING MUST FIRST BE REVIEWED AND APPROVED BY THE PROJECT ENGINEER ASSIGNED TO THE LOCATION FOR IT'S CORRECTNESS AND SUITABILITY FOR THE APPLICATION IN THE LOCATION WHERE THE EQUIPMENT IS TO BE INSTALLED.

SDC SECURITY DOOR CONTROLS

TITLE
UR2A TYPICAL WIRING MANTRAP B FOR FAIL SAFE LOCKS

DRN BY.	D.M.	REV.	DWG/S.O. NO.
CHKD BY.		B	2790
ORIGINATION DATE. 7-2-97			

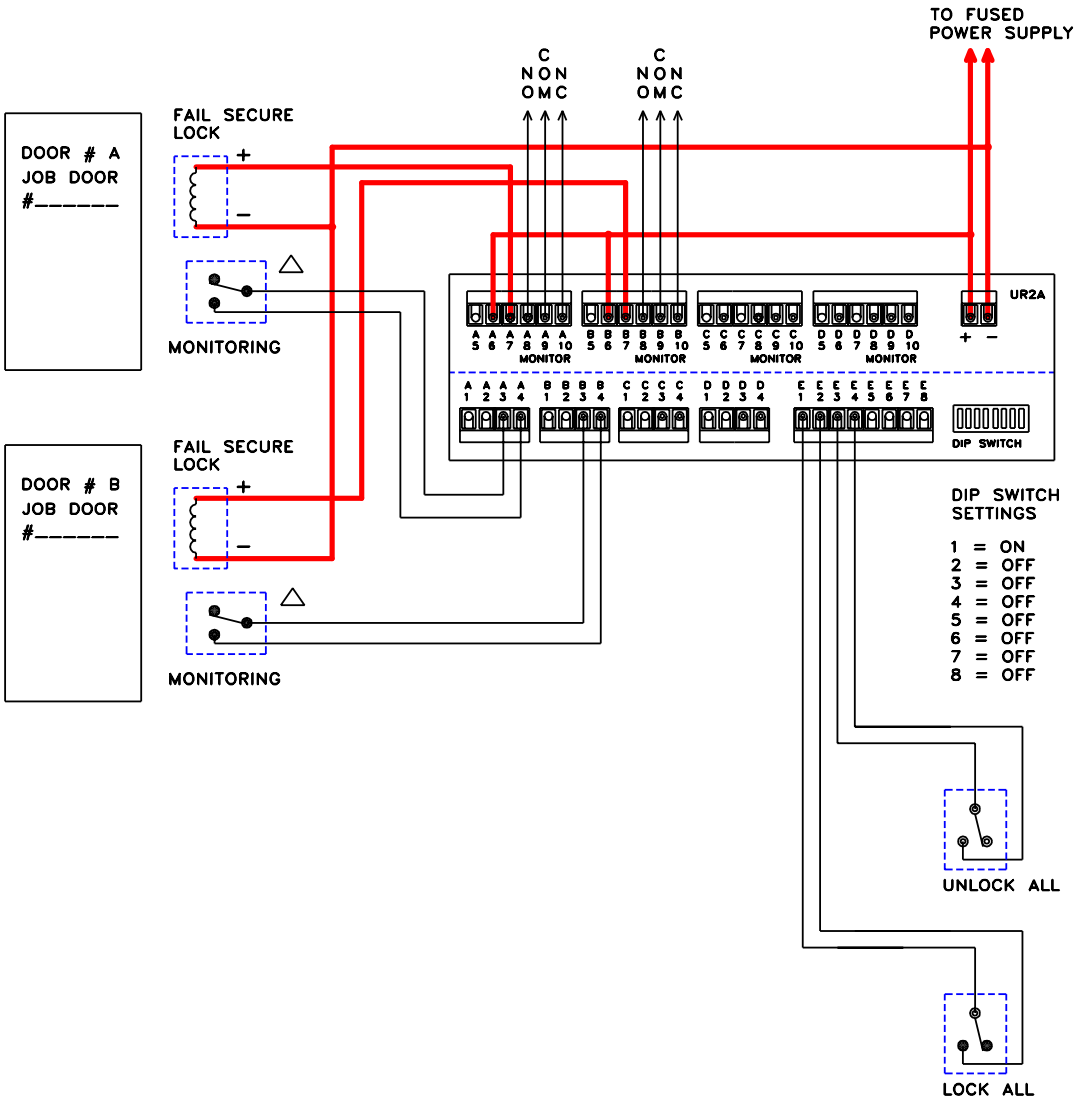

FOR POWER WIRE SIZE SEE WIRE CHART
ALL SIGNAL WIRES MUST BE 20 AWG OR LARGER.

POWER WIRES
SIGNAL WIRES

*TABLE 4 – MODE DIP SWITCH SETTINGS
INTERLOCK MODE SW8 = OFF
SW1 ON = INTERLOCK "A" MODE DOORS A, B
SW2 ON = MANTRAP "B" MODE DOORS A, B
SW3 NOT USED
SW4 NOT USED
SW5 ON = 5 SEC. OFF = 0
SW6 ON = 10 SEC. OFF = 0
SW7 ON = 20 SEC. OFF = 0
MANTRAP "B" UNLOCK TIME SWITCH SETTINGS (SW5–7)
ARE ADDITIVE. MIN. TIME = 1 SEC. MAX. TIME = 35 SEC.

△ SWITCHES SHOWN WITH DOOR CLOSED

ALL DOORS REMAIN CLOSED AND UNLOCKED. OPENING EITHER DOOR CAUSES THE OTHER DOOR(S) TO LOCK UNTIL THE OPENED DOOR RETURNS TO THE CLOSED POSITION.

ALL WIRING MUST FIRST BE REVIEWED AND APPROVED BY THE PROJECT ENGINEER ASSIGNED TO THE LOCATION FOR IT'S CORRECTNESS AND SUITABILITY FOR THE APPLICATION IN THE LOCATION WHERE THE EQUIPMENT IS TO BE INSTALLED.

SDC SECURITY DOOR CONTROLS

TITLE UR2A TYPICAL WIRING INTERLOCK A FOR FAIL SECURE LOCKS

DRN BY.	D.M.	REV.	DWG/S.O. NO.
CHKD BY.		A	2790
ORIGINATION DATE. 7–2–97			

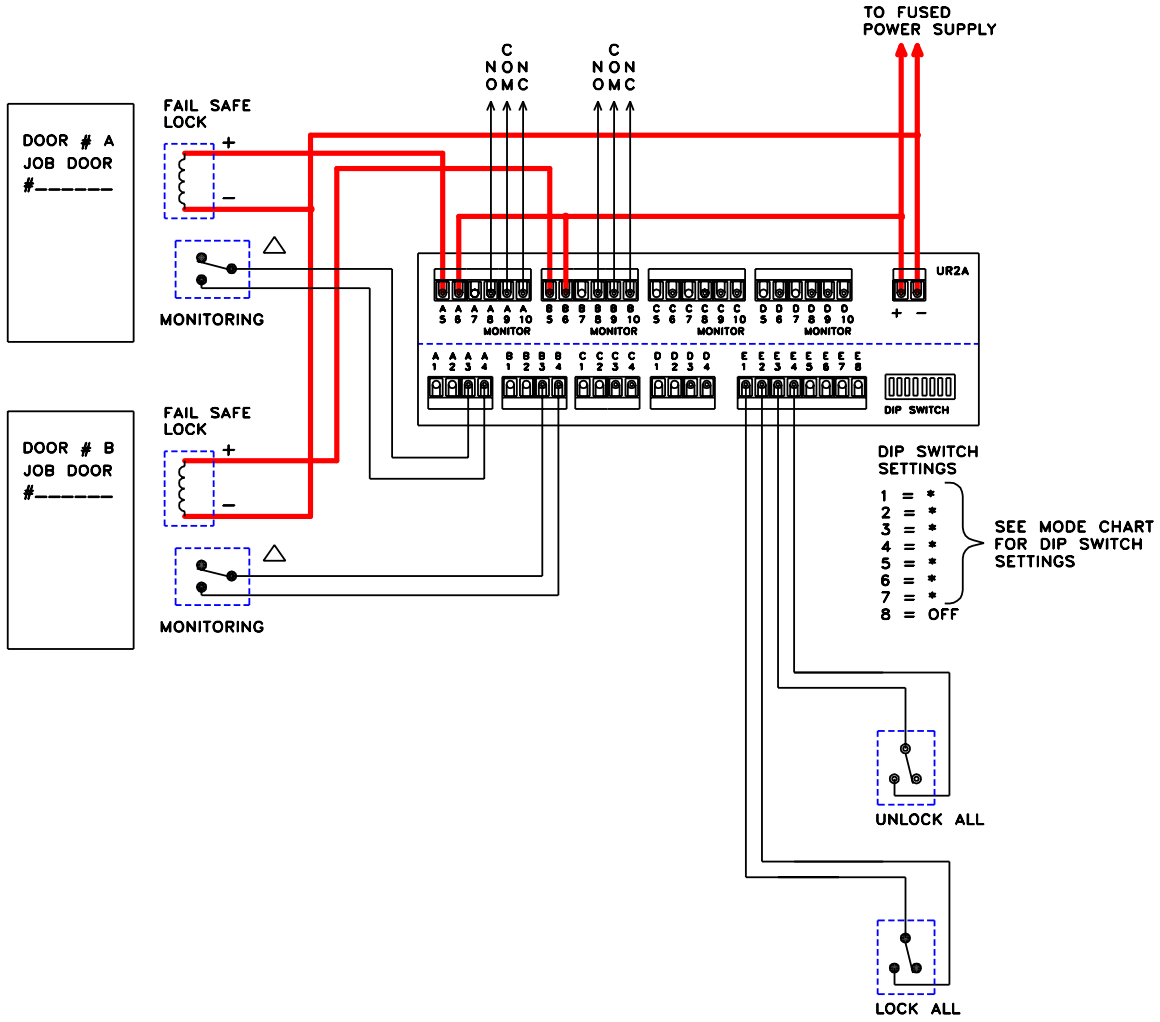

FOR POWER WIRE SIZE SEE WIRE CHART
ALL SIGNAL WIRES MUST BE 20 AWG OR LARGER.

POWER WIRES
SIGNAL WIRES

*TABLE 4 – MODE DIP SWITCH SETTINGS
INTERLOCK MODE SW8 = OFF
SW1 ON = INTERLOCK "A" MODE DOORS A, B
SW2 ON = MANTRAP "B" MODE DOORS A, B
SW3 NOT USED
SW4 NOT USED
SW5 ON = 5 SEC. OFF = 0
SW6 ON = 10 SEC. OFF = 0
SW7 ON = 20 SEC. OFF = 0
MANTRAP "B" UNLOCK TIME SWITCH SETTINGS (SW5–7)
ARE ADDITIVE. MIN. TIME = 1 SEC. MAX. TIME = 35 SEC.

△ SWITCHES SHOWN WITH DOOR CLOSED

ALL DOORS REMAIN CLOSED AND UNLOCKED. OPENING EITHER DOOR CAUSES THE OTHER DOOR(S) TO LOCK UNTIL THE OPENED DOOR RETURNS TO THE CLOSED POSITION.

ALL WIRING MUST FIRST BE REVIEWED AND APPROVED BY THE PROJECT ENGINEER ASSIGNED TO THE LOCATION FOR IT'S CORRECTNESS AND SUITABILITY FOR THE APPLICATION IN THE LOCATION WHERE THE EQUIPMENT IS TO BE INSTALLED.

SDC SECURITY DOOR CONTROLS

TITLE
UR2A TYPICAL WIRING INTERLOCK A FOR FAIL SAFE LOCKS

DRN BY.	D.M.	REV.	DWG/S.O. NO.
CHKD BY.		B	2790
ORIGINATION DATE. 7-2-97			

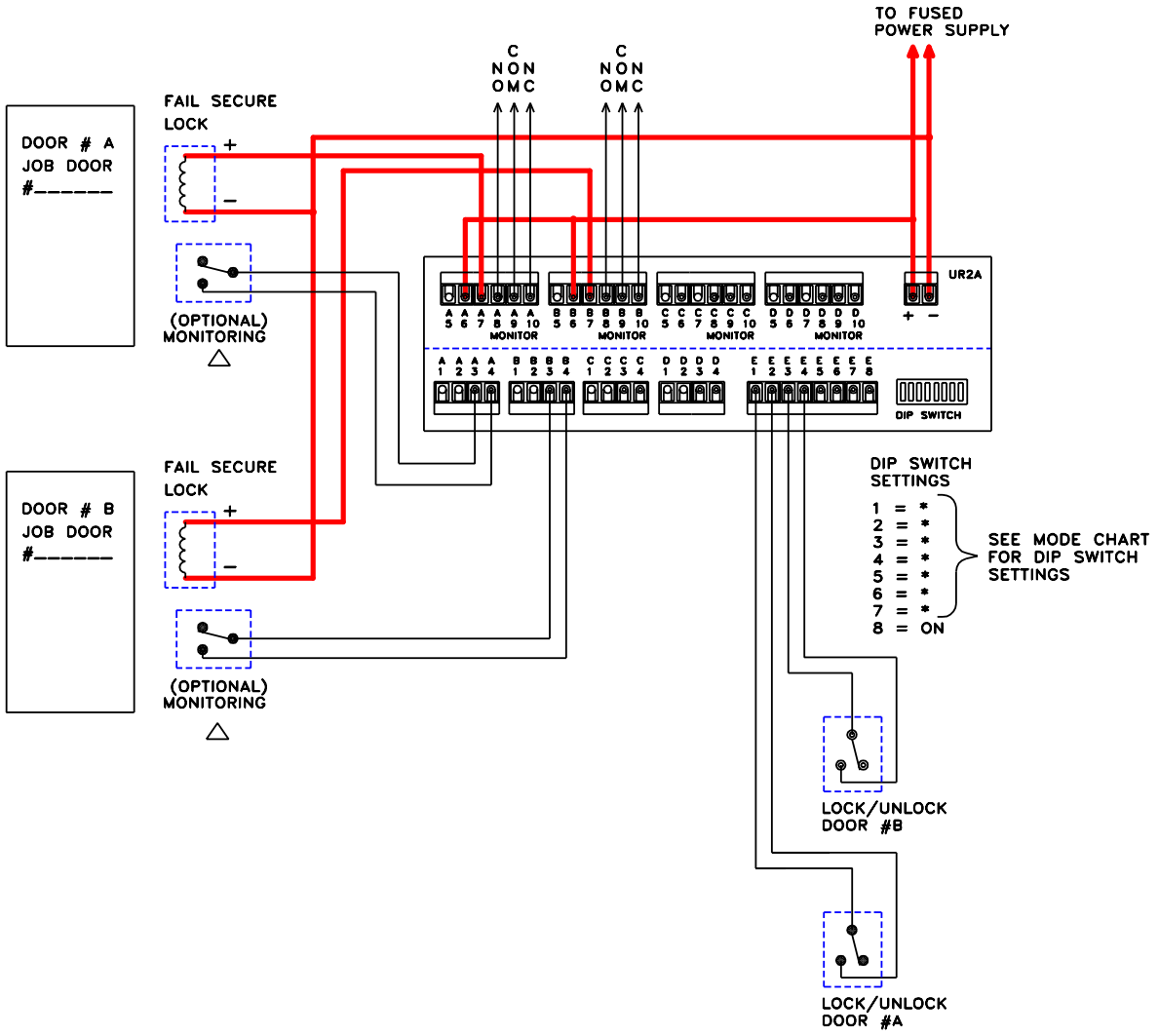

FOR POWER WIRE SIZE SEE WIRE CHART
ALL SIGNAL WIRES MUST BE 20 AWG OR LARGER.

POWER WIRES
SIGNAL WIRES

*TABLE 3 – MODE DIP SWITCH SETTINGS
CONTROL MODE SW8 = ON
SW1 ON = TD/LR OFF = CR DOOR A
SW2 ON = TD/LR OFF = CR DOOR B
SW3 NOT USED
SW4 NOT USED
SW5 ON = 5 SEC. OFF = 0
SW6 ON = 10 SEC. OFF = 0
SW7 ON = 20 SEC. OFF = 0
TD MODE TIME SWITCH SETTING (SW5–7) ARE ADDITIVE.
MIN. TIME = 1 SEC. MAX. TIME = 35 SEC.

△ SWITCHES SHOWN WITH DOOR CLOSED

ALL WIRING MUST FIRST BE REVIEWED AND APPROVED BY THE PROJECT ENGINEER ASSIGNED TO THE LOCATION FOR IT'S CORRECTNESS AND SUITABILITY FOR THE APPLICATION IN THE LOCATION WHERE THE EQUIPMENT IS TO BE INSTALLED.

SDC SECURITY DOOR CONTROLS

TITLE
UR2A TYPICAL WIRING TD/LR MODE FOR FAIL SECURE LOCKS LR ONLY

DRN BY.	D.M.	REV.	DWG/S.O. NO.
CHKD BY.		A	2790
ORIGINATION DATE. 7-2-97			

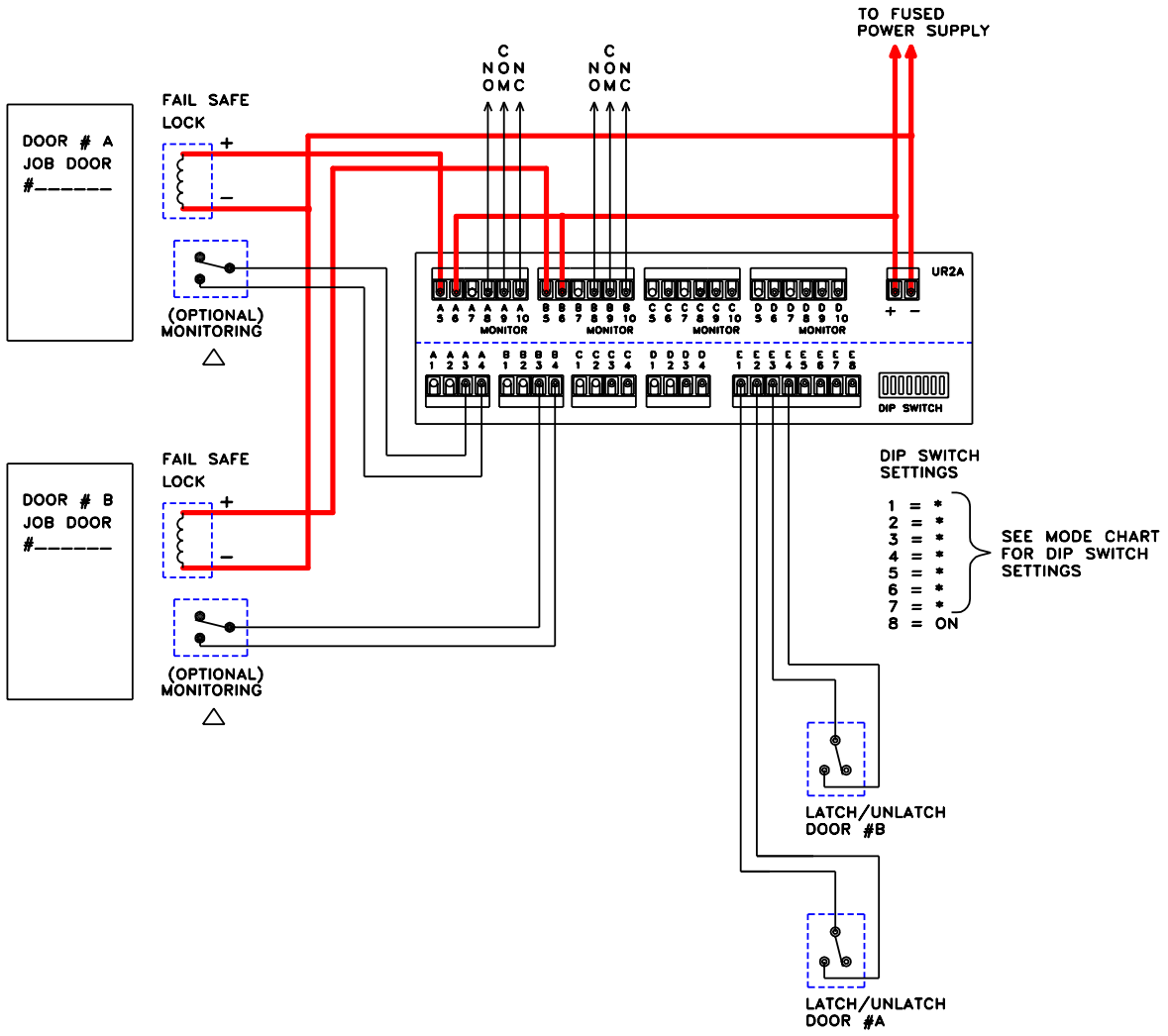

FOR POWER WIRE SIZE SEE WIRE CHART
ALL SIGNAL WIRES MUST BE 20 AWG OR LARGER.

POWER WIRES
SIGNAL WIRES

*TABLE 3 – MODE DIP SWITCH SETTINGS
CONTROL MODE SW8 = ON
SW1 ON = TD/LR OFF = CR DOOR A
SW2 ON = TD/LR OFF = CR DOOR B
SW3 NOT USED
SW4 NOT USED
SW5 ON = 5 SEC. OFF = 0
SW6 ON = 10 SEC. OFF = 0
SW7 ON = 20 SEC. OFF = 0
TD MODE TIME SWITCH SETTING (SW5-7) ARE ADDITIVE.
MIN. TIME = 1 SEC. MAX. TIME = 35 SEC.

△ SWITCHES SHOWN WITH DOOR CLOSED

ALL WIRING MUST FIRST BE REVIEWED AND APPROVED BY THE PROJECT ENGINEER ASSIGNED TO THE LOCATION FOR IT'S CORRECTNESS AND SUITABILITY FOR THE APPLICATION IN THE LOCATION WHERE THE EQUIPMENT IS TO BE INSTALLED.

SDC SECURITY DOOR CONTROLS

TITLE
UR2A TYPICAL WIRING TD/LR MODE
FOR FAIL SAFE LOCKS LR ONLY

DRN BY.	D.M.	REV.	DWG/S.O. NO.
CHKD BY.		A	2790
ORIGINATION DATE. 7-2-97			

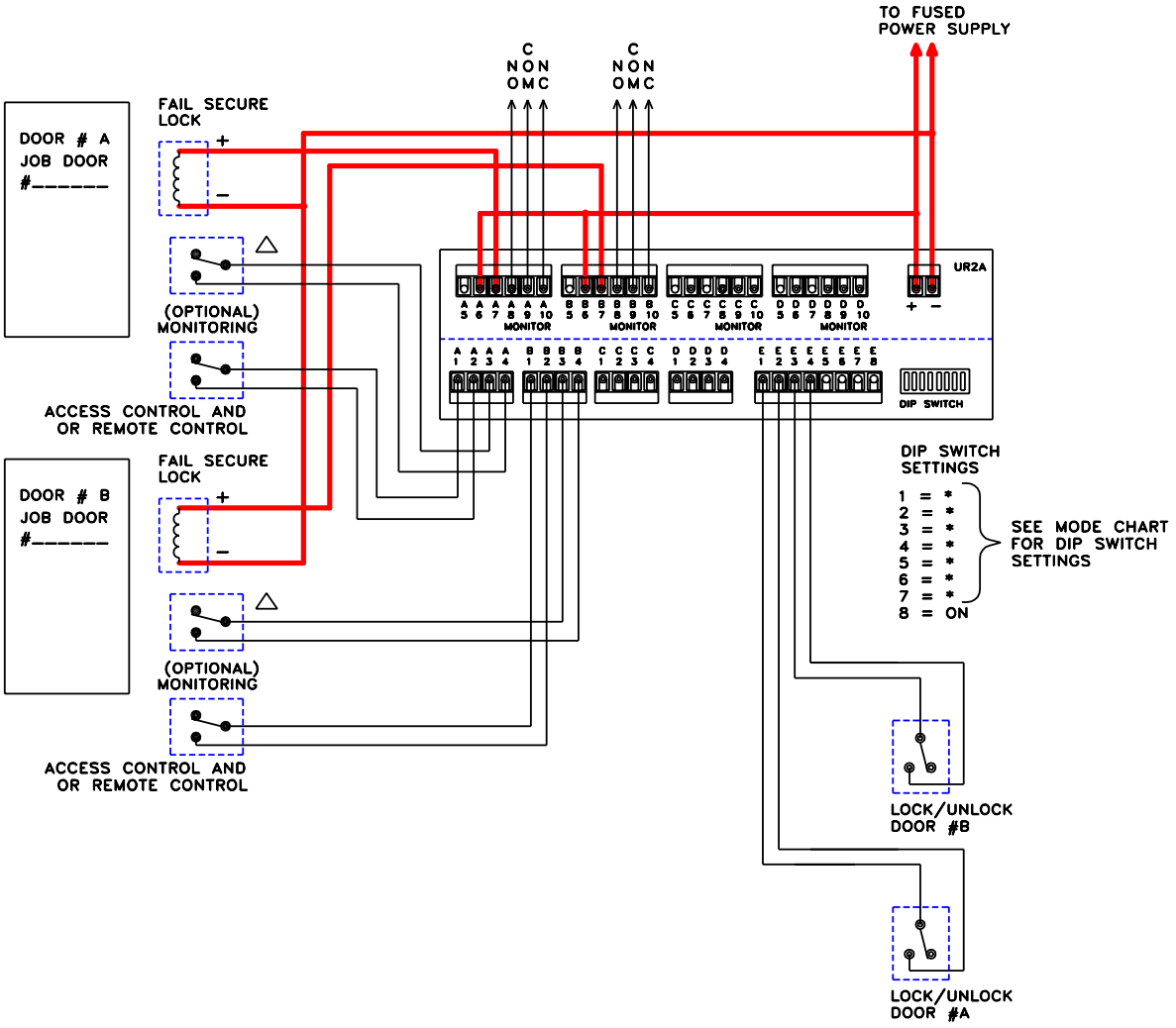

FOR POWER WIRE SIZE SEE WIRE CHART
ALL SIGNAL WIRES MUST BE 20 AWG OR LARGER.

POWER WIRES
SIGNAL WIRES

*TABLE 3 – MODE DIP SWITCH SETTINGS
CONTROL MODE SW8 = ON
SW1 ON = TD/LR OFF = CR DOOR A
SW2 ON = TD/LR OFF = CR DOOR B
SW3 NOT USED
SW4 NOT USED
SW5 ON = 5 SEC. OFF = 0
SW6 ON = 10 SEC. OFF = 0
SW7 ON = 20 SEC. OFF = 0
TD MODE TIME SWITCH SETTING (SW5–7) ARE ADDITIVE.
MIN. TIME = 1 SEC. MAX. TIME = 35 SEC.

△ SWITCHES SHOWN WITH DOOR CLOSED

ALL WIRING MUST FIRST BE REVIEWED AND APPROVED BY THE PROJECT ENGINEER ASSIGNED TO THE LOCATION FOR IT'S CORRECTNESS AND SUITABILITY FOR THE APPLICATION IN THE LOCATION WHERE THE EQUIPMENT IS TO BE INSTALLED.

SDC SECURITY DOOR CONTROLS	TITLE UR2A TYPICAL WIRING TD/LR MODE FOR SECURE LOCKS	DRN BY. D.M. CHKD BY. ORIGINATION DATE. 7–2–97	REV. A	DWG/S.O. NO. 2790

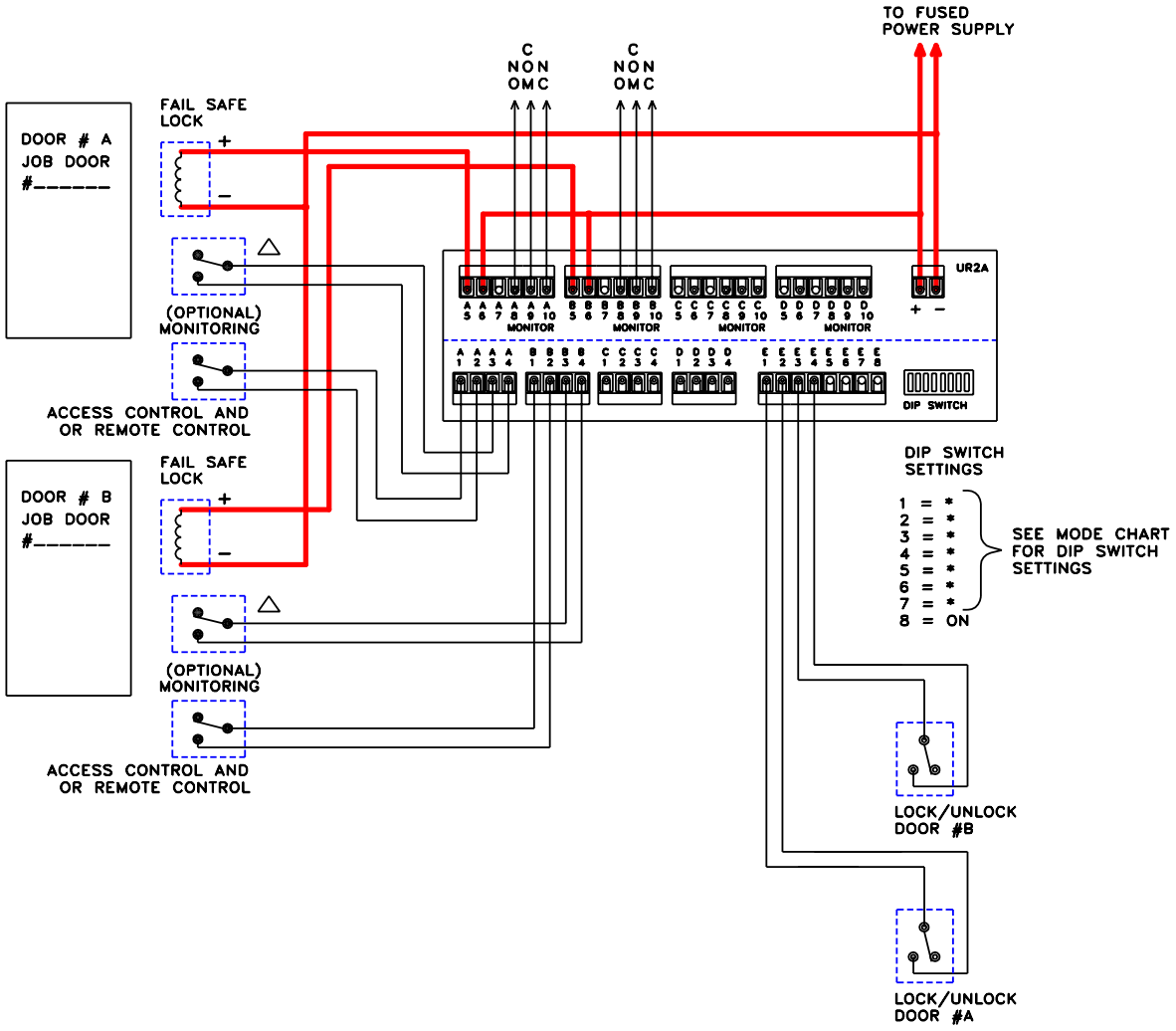

FOR POWER WIRE SIZE SEE WIRE CHART
ALL SIGNAL WIRES MUST BE 20 AWG OR LARGER.

POWER WIRES
SIGNAL WIRES

*TABLE 3 – MODE DIP SWITCH SETTINGS
CONTROL MODE SW8 = ON
SW1 ON = TD/LR OFF = CR DOOR A
SW2 ON = TD/LR OFF = CR DOOR B
SW3 NOT USED
SW4 NOT USED
SW5 ON = 5 SEC. OFF = 0
SW6 ON = 10 SEC. OFF = 0
SW7 ON = 20 SEC. OFF = 0
TD MODE TIME SWITCH SETTING (SW5–7) ARE ADDITIVE.
MIN. TIME = 1 SEC. MAX. TIME = 35 SEC.

△ SWITCHES SHOWN WITH DOOR CLOSED

ALL WIRING MUST FIRST BE REVIEWED AND APPROVED BY THE PROJECT ENGINEER ASSIGNED TO THE LOCATION FOR IT'S CORRECTNESS AND SUITABILITY FOR THE APPLICATION IN THE LOCATION WHERE THE EQUIPMENT IS TO BE INSTALLED.

SDC SECURITY DOOR CONTROLS

TITLE
UR2A TYPICAL WIRING TD/LR MODE FOR FAIL SAFE LOCKS

DRN BY.	D.M.	REV.	DWG/S.O. NO.
CHKD BY.		B	2790
ORIGINATION DATE. 7–2–97			

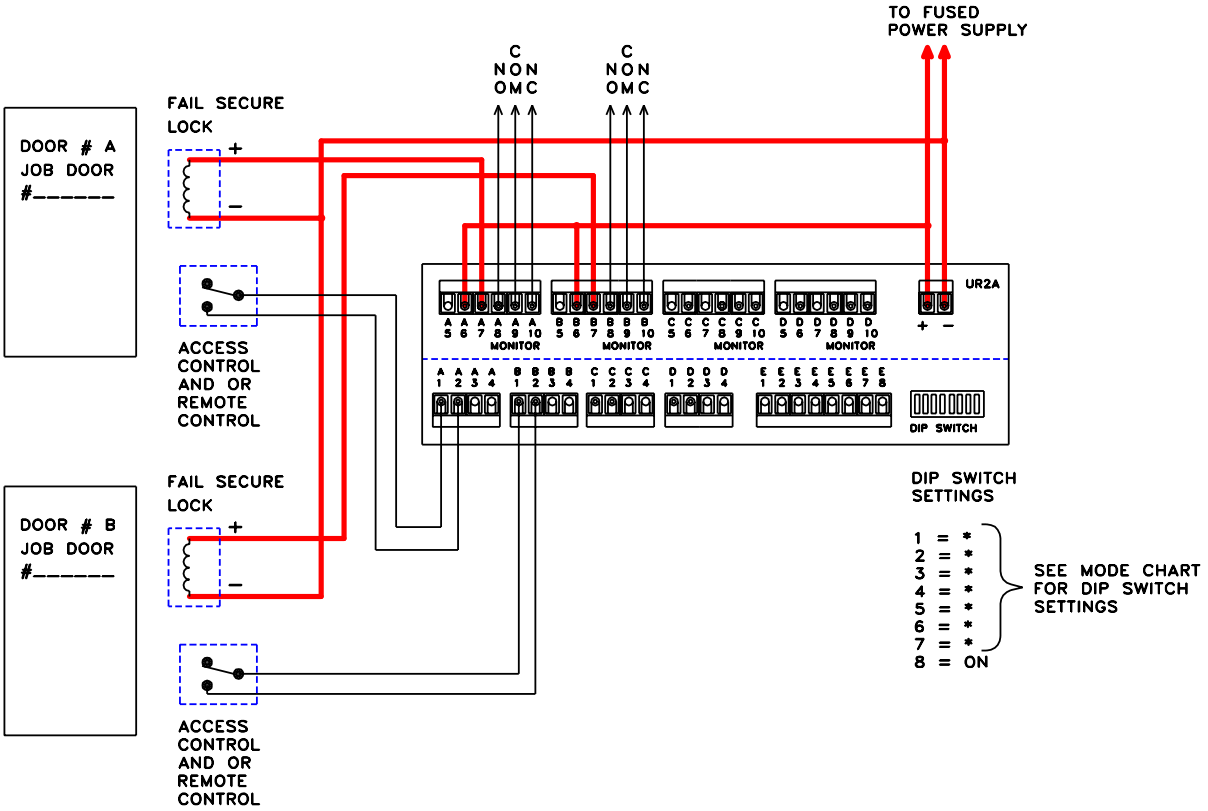

DIP SWITCH SETTINGS

1 = *
2 = *
3 = *
4 = *
5 = *
6 = *
7 = *
8 = ON

SEE MODE CHART FOR DIP SWITCH SETTINGS

FOR POWER WIRE SIZE SEE WIRE CHART
ALL SIGNAL WIRES MUST BE 20 AWG OR LARGER.

POWER WIRES
SIGNAL WIRES

*TABLE 3 – MODE DIP SWITCH SETTINGS
CONTROL MODE SW8 = ON
SW1 ON = TD/LR OFF = CR DOOR A
SW2 ON = TD/LR OFF = CR DOOR B
SW3 NOT USED
SW4 NOT USED
SW5 ON = 5 SEC. OFF = 0
SW6 ON = 10 SEC. OFF = 0
SW7 ON = 20 SEC. OFF = 0
TD MODE TIME SWITCH SETTING (SW5–7) ARE ADDITIVE.
MIN. TIME = 1 SEC. MAX. TIME = 35 SEC.

ALL WIRING MUST FIRST BE REVIEWED AND APPROVED BY THE PROJECT ENGINEER ASSIGNED TO THE LOCATION FOR IT'S CORRECTNESS AND SUITABILITY FOR THE APPLICATION IN THE LOCATION WHERE THE EQUIPMENT IS TO BE INSTALLED.

SDC SECURITY DOOR CONTROLS	TITLE UR2A TYPICAL WIRING CR MODE FOR FAIL SECURE LOCKS	DRN BY. D.M. / CHKD BY. / ORIGINATION DATE. 7-2-97	REV. A	DWG/S.O. NO. 2790

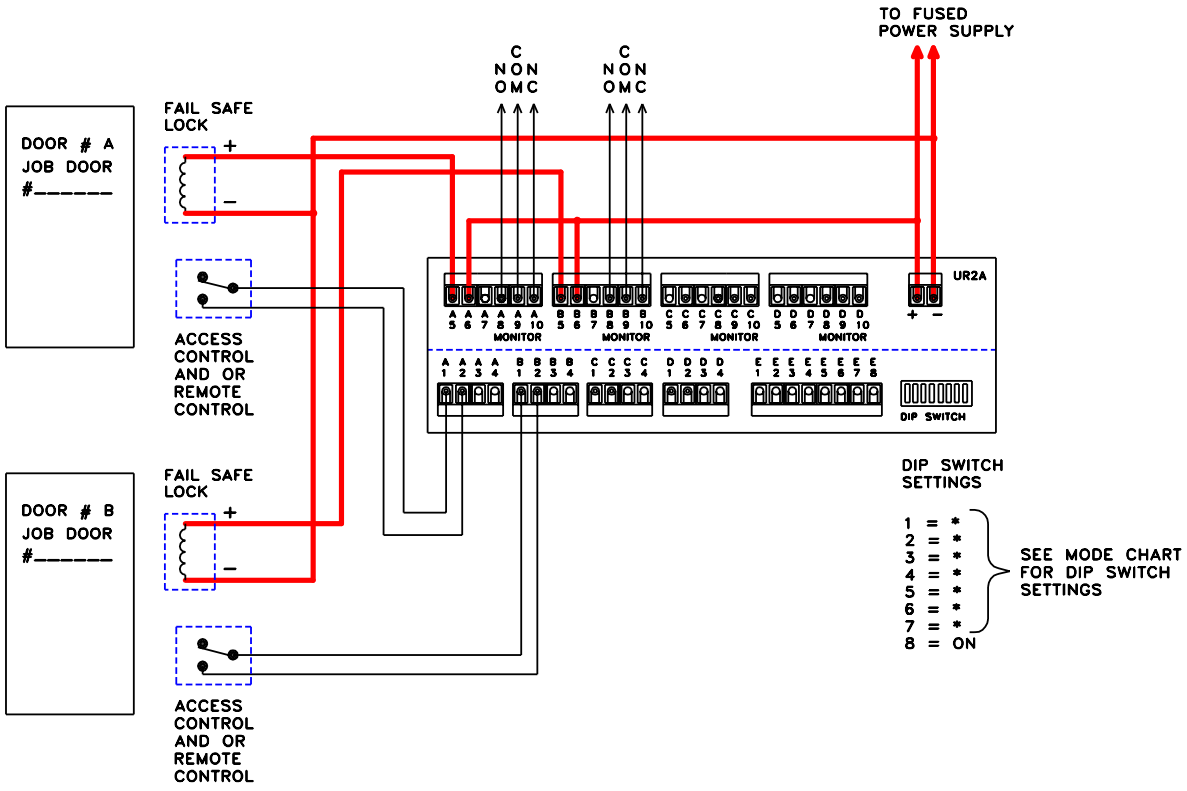

FOR POWER WIRE SIZE SEE WIRE CHART
ALL SIGNAL WIRES MUST BE 20 AWG OR LARGER.

POWER WIRES
SIGNAL WIRES

*TABLE 3 – MODE DIP SWITCH SETTINGS
CONTROL MODE SW8 = ON
SW1 ON = TD/LR OFF = CR DOOR A
SW2 ON = TD/LR OFF = CR DOOR B
SW3 NOT USED
SW4 NOT USED
SW5 ON = 5 SEC. OFF = 0
SW6 ON = 10 SEC. OFF = 0
SW7 ON = 20 SEC. OFF = 0
TD MODE TIME SWITCH SETTING (SW5–7) ARE ADDITIVE.
MIN. TIME = 1 SEC. MAX. TIME = 35 SEC.

ALL WIRING MUST FIRST BE REVIEWED AND APPROVED BY THE PROJECT ENGINEER ASSIGNED TO THE LOCATION FOR IT'S CORRECTNESS AND SUITABILITY FOR THE APPLICATION IN THE LOCATION WHERE THE EQUIPMENT IS TO BE INSTALLED.

SDC SECURITY DOOR CONTROLS	TITLE UR2A TYPICAL WIRING CR MODE FOR FAIL SAFE LOCKS	DRN BY. D.M. / CHKD BY. / ORIGINATION DATE. 7–2–97	REV. A	DWG/S.O. NO. 2790

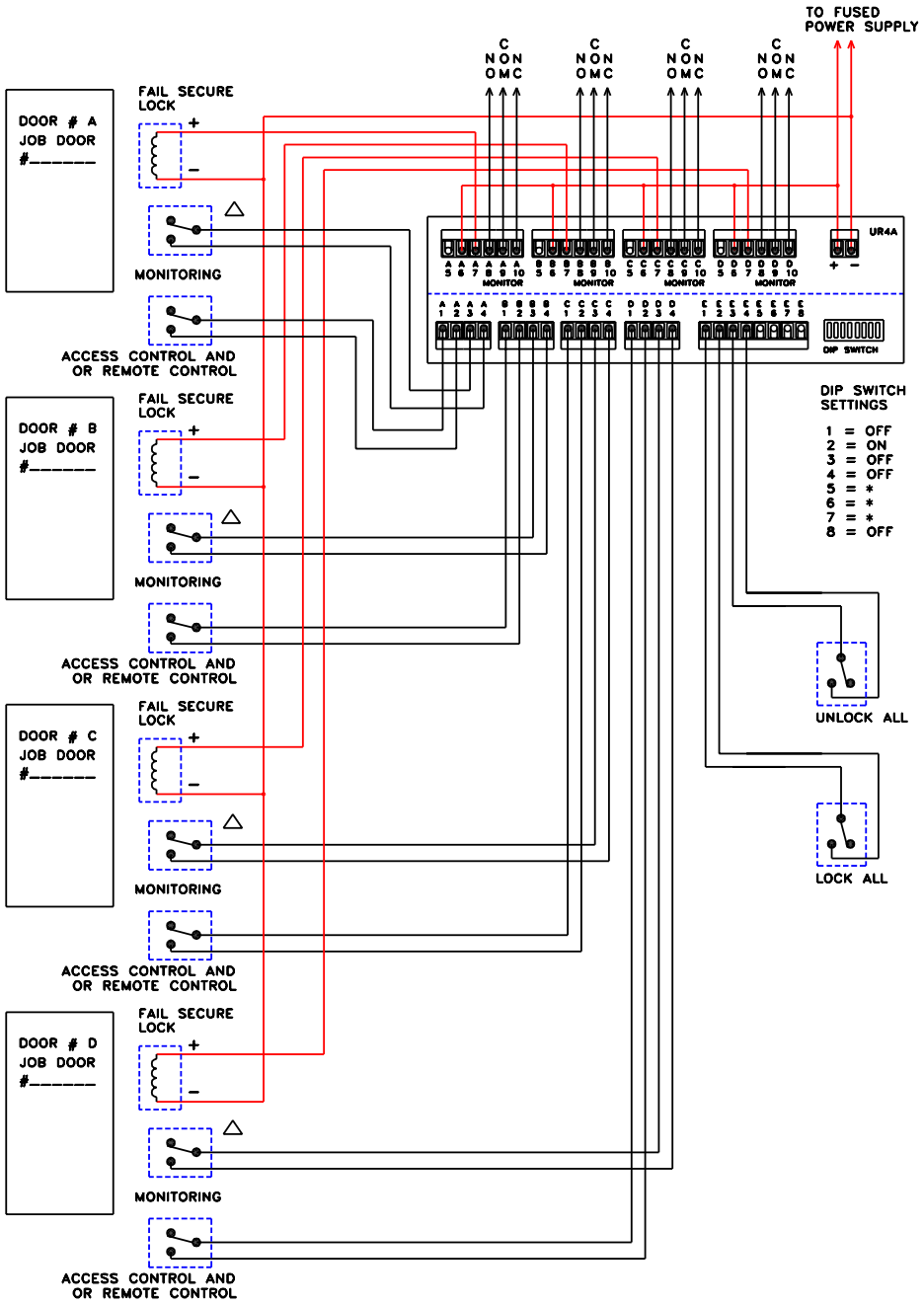

FOR POWER WIRE SIZE SEE WIRE CHART
ALL SIGNAL WIRES MUST BE 20 AWG OR LARGER.

POWER WIRES
SIGNAL WIRES

*TABLE 2 – MODE DIP SWITCH SETTINGS
INTERLOCK MODE SW8 = OFF
SW1 ON = INTERLOCK "A" MODE DOORS A, B, C, D
SW2 ON = MANTRAP "B" MODE DOORS A, B, C, D
SW3 NOT USED
SW4 NOT USED
SW5 ON = 5 SEC. OFF = 0
SW6 ON = 10 SEC. OFF = 0
SW7 ON = 20 SEC. OFF = 0
MANTRAP "B" UNLOCK TIME SWITCH SETTINGS (SW5-7) ARE ADDITIVE. MIN. TIME = 1 SEC. MAX. TIME = 35 SEC.

△ SWITCHES SHOWN WITH DOOR CLOSED

ALL DOORS REMAIN CLOSED AND LOCKED. UNLOCKING ANY DOOR CAUSES THE OTHER DOOR(S) TO BE INCAPABLE OF BEING UNLOCKED.

ALL WIRING MUST FIRST BE REVIEWED AND APPROVED BY THE PROJECT ENGINEER ASSIGNED TO THE LOCATION FOR IT'S CORRECTNESS AND SUITABILITY FOR THE APPLICATION IN THE LOCATION WHERE THE EQUIPMENT IS TO BE INSTALLED.

SDC SECURITY DOOR CONTROLS

TITLE
UR4A TYPICAL WIRING MANTRAP B FOR FAIL SECURE LOCKS

DRN BY.	D.M.	REV.	DWG/S.O. NO.
CHKD BY.		A	2791
ORIGINATION DATE. 7-2-97			

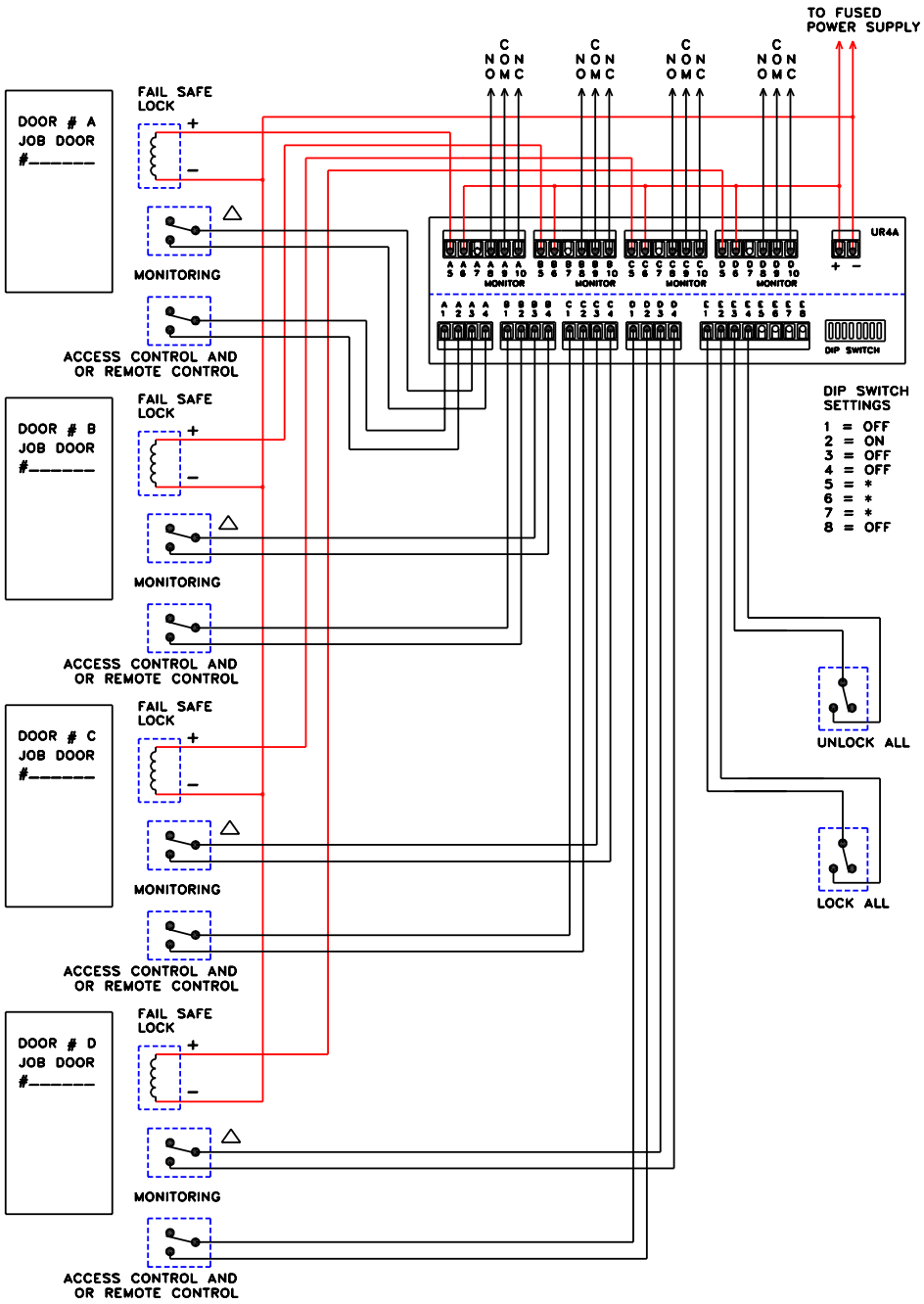

FOR POWER WIRE SIZE SEE WIRE CHART
ALL SIGNAL WIRES MUST BE 20 AWG OR LARGER.

POWER WIRES
SIGNAL WIRES

*TABLE 2 – MODE DIP SWITCH SETTINGS
INTERLOCK MODE SW8 = OFF
SW1 ON = INTERLOCK "A" MODE DOORS A, B, C, D
SW2 ON = MANTRAP "B" MODE DOORS A, B, C, D
SW3 NOT USED
SW4 NOT USED
SW5 ON = 5 SEC. OFF = 0
SW6 ON = 10 SEC. OFF = 0
SW7 ON = 20 SEC. OFF = 0
MANTRAP "B" UNLOCK TIME SWITCH SETTINGS (SW5–7)
ARE ADDITIVE. MIN. TIME = 1 SEC. MAX. TIME = 35 SEC.

△ SWITCHES SHOWN WITH DOOR CLOSED

ALL DOORS REMAIN CLOSED AND LOCKED. UNLOCKING ANY DOOR CAUSES THE OTHER DOOR(S) TO BE INCAPABLE OF BEING UNLOCKED.

ALL WIRING MUST FIRST BE REVIEWED AND APPROVED BY THE PROJECT ENGINEER ASSIGNED TO THE LOCATION FOR IT'S CORRECTNESS AND SUITABILITY FOR THE APPLICATION IN THE LOCATION WHERE THE EQUIPMENT IS TO BE INSTALLED.

SDC
SECURITY DOOR CONTROLS

TITLE
UR4A TYPICAL WIRING MANTRAP B
FOR FAIL SAFE LOCKS

DRN BY.	D.M.	REV.	DWG/S.O. NO.
CHKD BY.		A	2791
ORIGINATION DATE. 7-2-97			

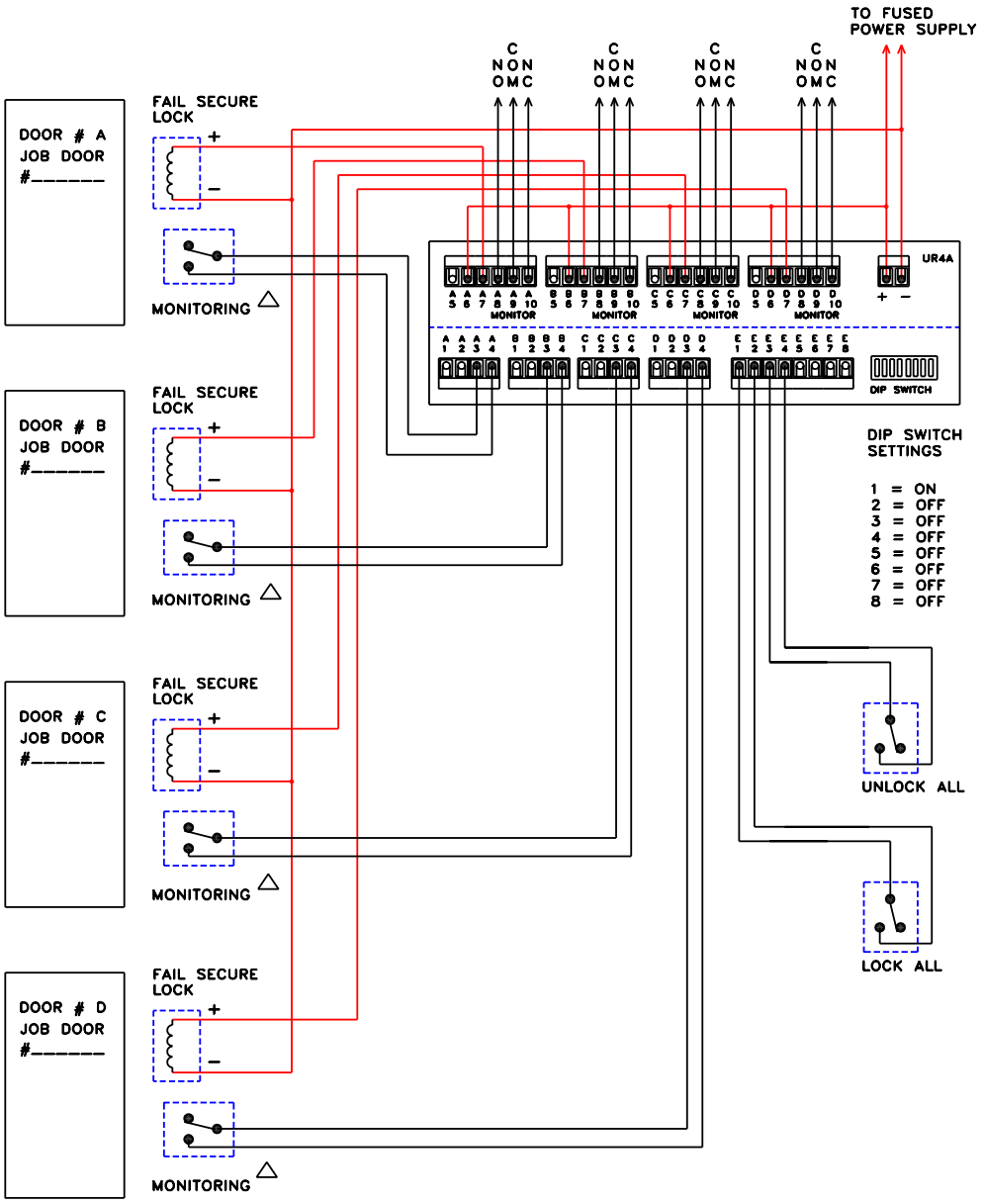

FOR POWER WIRE SIZE SEE WIRE CHART
ALL SIGNAL WIRES MUST BE 20 AWG OR LARGER.

POWER WIRES
SIGNAL WIRES

*TABLE 2 – MODE DIP SWITCH SETTINGS
INTERLOCK MODE SW8 = OFF
SW1 ON = INTERLOCK "A" MODE DOORS A, B, C, D
SW2 ON = MANTRAP "B" MODE DOORS A, B, C, D
SW3 NOT USED
SW4 NOT USED
SW5 ON = 5 SEC. OFF = 0
SW6 ON = 10 SEC. OFF = 0
SW7 ON = 20 SEC. OFF = 0
MANTRAP "B" UNLOCK TIME SWITCH SETTINGS (SW5–7) ARE ADDITIVE. MIN. TIME = 1 SEC. MAX. TIME = 35 SEC.

△ SWITCHES SHOWN WITH DOOR CLOSED

ALL DOORS REMAIN CLOSED AND UNLOCKED. OPENING ANY DOOR CAUSES THE OTHER DOOR(S) TO LOCK UNTIL THE OPENED DOOR RETURNS TO THE CLOSED POSITION.

ALL WIRING MUST FIRST BE REVIEWED AND APPROVED BY THE PROJECT ENGINEER ASSIGNED TO THE LOCATION FOR IT'S CORRECTNESS AND SUITABILITY FOR THE APPLICATION IN THE LOCATION WHERE THE EQUIPMENT IS TO BE INSTALLED.

SDC SECURITY DOOR CONTROLS

TITLE UR4A TYPICAL WIRING INTERLOCK A FOR FAIL SECURE LOCKS

DRN BY.	D.M.	REV.	DWG/S.O. NO.
CHKD BY.		A	2791
ORIGINATION DATE. 7-2-97			

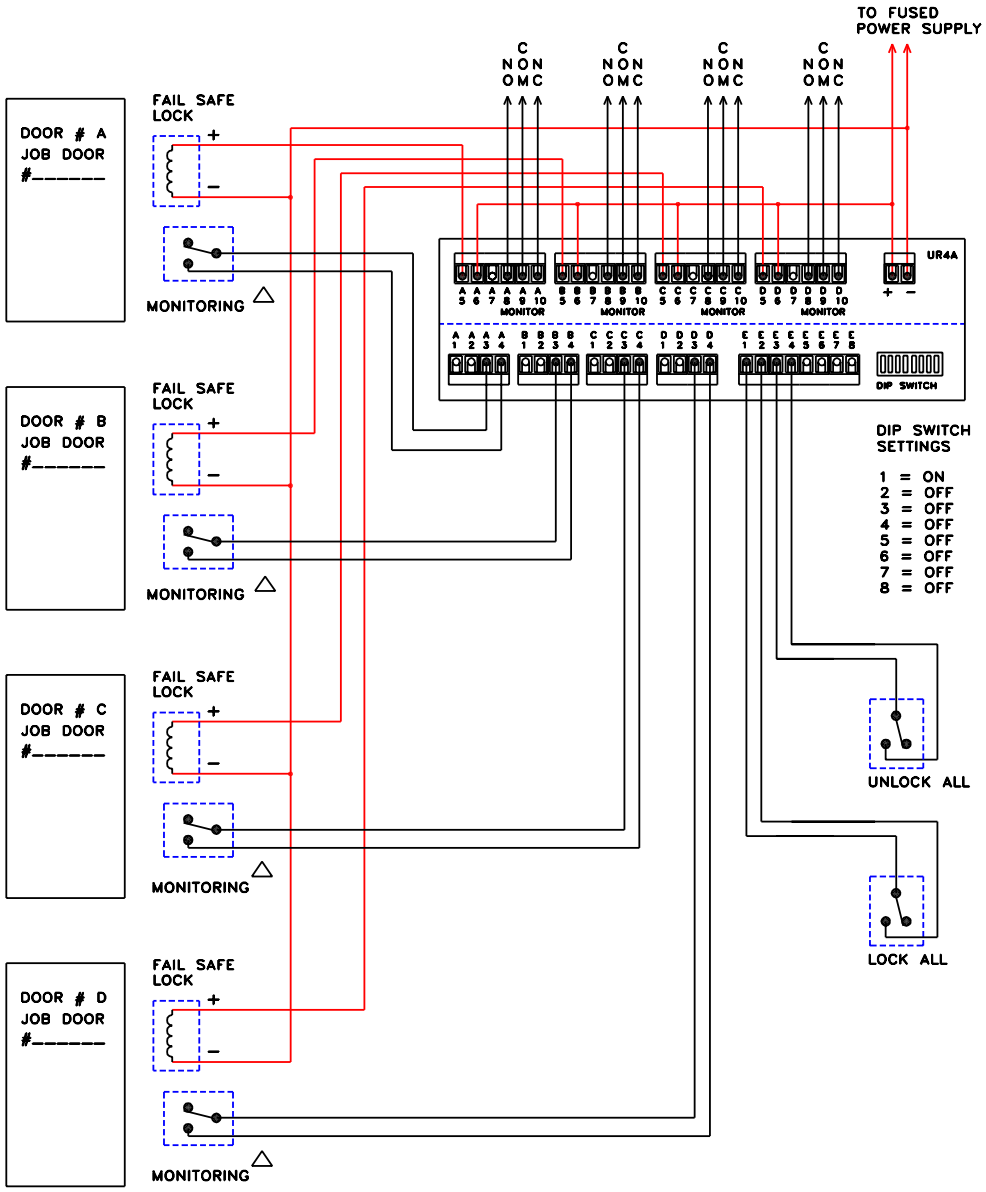

FOR POWER WIRE SIZE SEE WIRE CHART
ALL SIGNAL WIRES MUST BE 20 AWG OR LARGER.

*TABLE 2 – MODE DIP SWITCH SETTINGS
INTERLOCK MODE SW8 = OFF
SW1 ON = INTERLOCK "A" MODE DOORS A, B, C, D
SW2 ON = MANTRAP "B" MODE DOORS A, B, C, D
SW3 NOT USED
SW4 NOT USED
SW5 ON = 5 SEC. OFF = 0
SW6 ON = 10 SEC. OFF = 0
SW7 ON = 20 SEC. OFF = 0
MANTRAP "B" UNLOCK TIME SWITCH SETTINGS (SW5–7)
ARE ADDITIVE. MIN. TIME = 1 SEC. MAX. TIME = 35 SEC.

POWER WIRES
SIGNAL WIRES

△ SWITCHES SHOWN WITH DOOR CLOSED

ALL DOORS REMAIN CLOSED AND UNLOCKED. OPENING ANY DOOR CAUSES THE OTHER DOOR(S) TO LOCK UNTIL THE OPENED DOOR RETURNS TO THE CLOSED POSITION.

ALL WIRING MUST FIRST BE REVIEWED AND APPROVED BY THE PROJECT ENGINEER ASSIGNED TO THE LOCATION FOR IT'S CORRECTNESS AND SUITABILITY FOR THE APPLICATION IN THE LOCATION WHERE THE EQUIPMENT IS TO BE INSTALLED.

SDC SECURITY DOOR CONTROLS

TITLE
UR4A TYPICAL WIRING INTERLOCK A FOR FAIL SAFE LOCKS

DRN BY.	D.M.	REV.	DWG/S.O. NO.
CHKD BY.		A	2791
ORIGINATION DATE. 7-2-97			

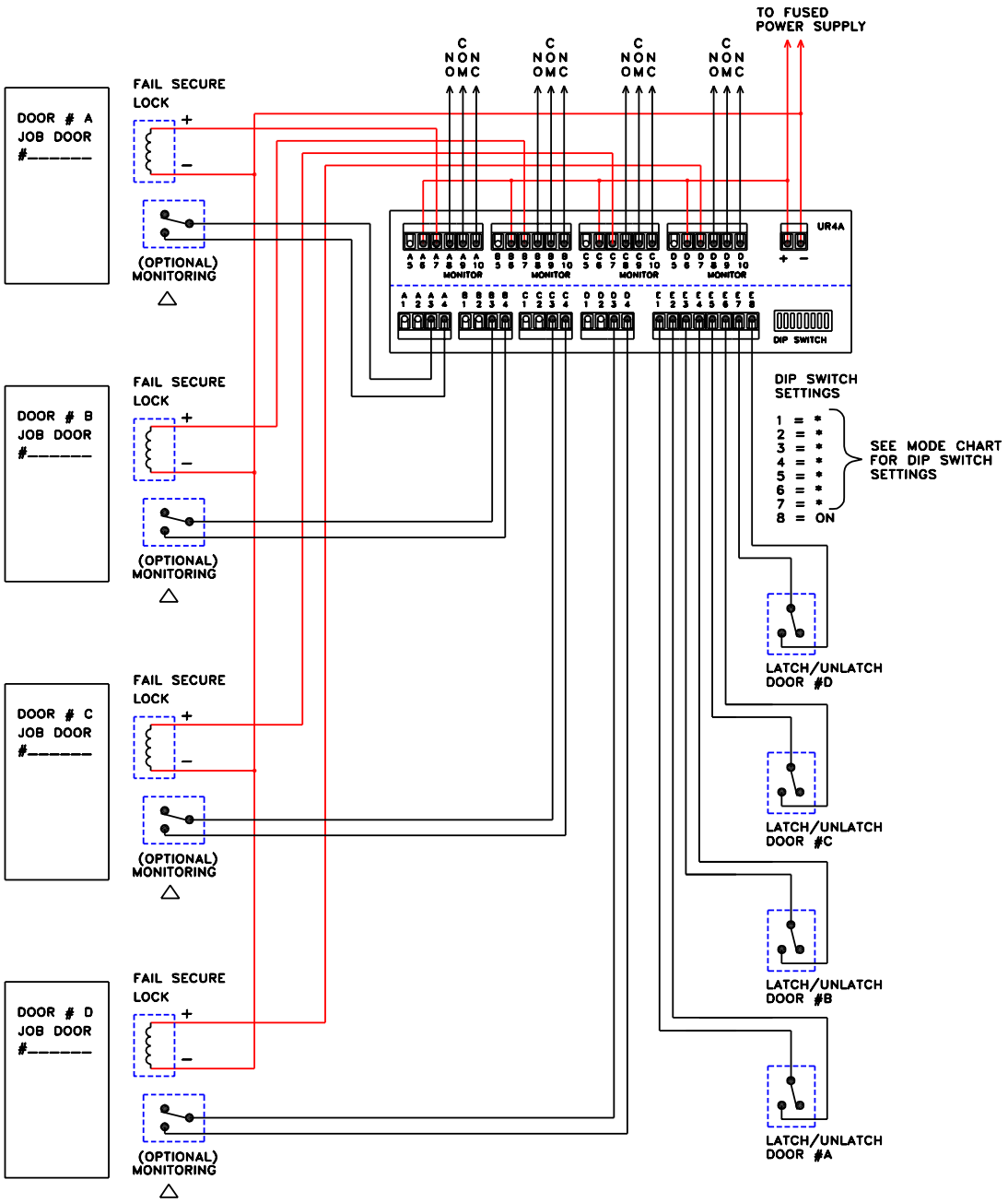

FOR POWER WIRE SIZE SEE WIRE CHART
ALL SIGNAL WIRES MUST BE 20 AWG OR LARGER.

POWER WIRES
SIGNAL WIRES

*TABLE 1 – MODE DIP SWITCH SETTINGS
CONTROL MODE SW8 = ON

SW1	ON = TD/LR	OFF = CR	DOOR A
SW2	ON = TD/LR	OFF = CR	DOOR B
SW3	ON = TD/LR	OFF = CR	DOOR C
SW4	ON = TD/LR	OFF = CR	DOOR D
SW5	ON = 5 SEC.	OFF = 0	
SW6	ON = 10 SEC.	OFF = 0	
SW7	ON = 20 SEC.	OFF = 0	

TD MODE TIME SWITCH SETTING (SW5–7) ARE ADDITIVE.
MIN. TIME = 1 SEC. MAX. TIME = 35 SEC.

△ SWITCHES SHOWN WITH DOOR CLOSED

ALL WIRING MUST FIRST BE REVIEWED AND APPROVED BY THE PROJECT ENGINEER ASSIGNED TO THE LOCATION FOR IT'S CORRECTNESS AND SUITABILITY FOR THE APPLICATION IN THE LOCATION WHERE THE EQUIPMENT IS TO BE INSTALLED.

SDC SECURITY DOOR CONTROLS

TITLE
UR4A TYPICAL WIRING TD/LR MODE
FOR FAIL SECURE LOCKS LR ONLY

DRN BY.	D.M.	REV.	DWG/S.O. NO.
CHKD BY.		A	2791
ORIGINATION DATE. 7-2-97			

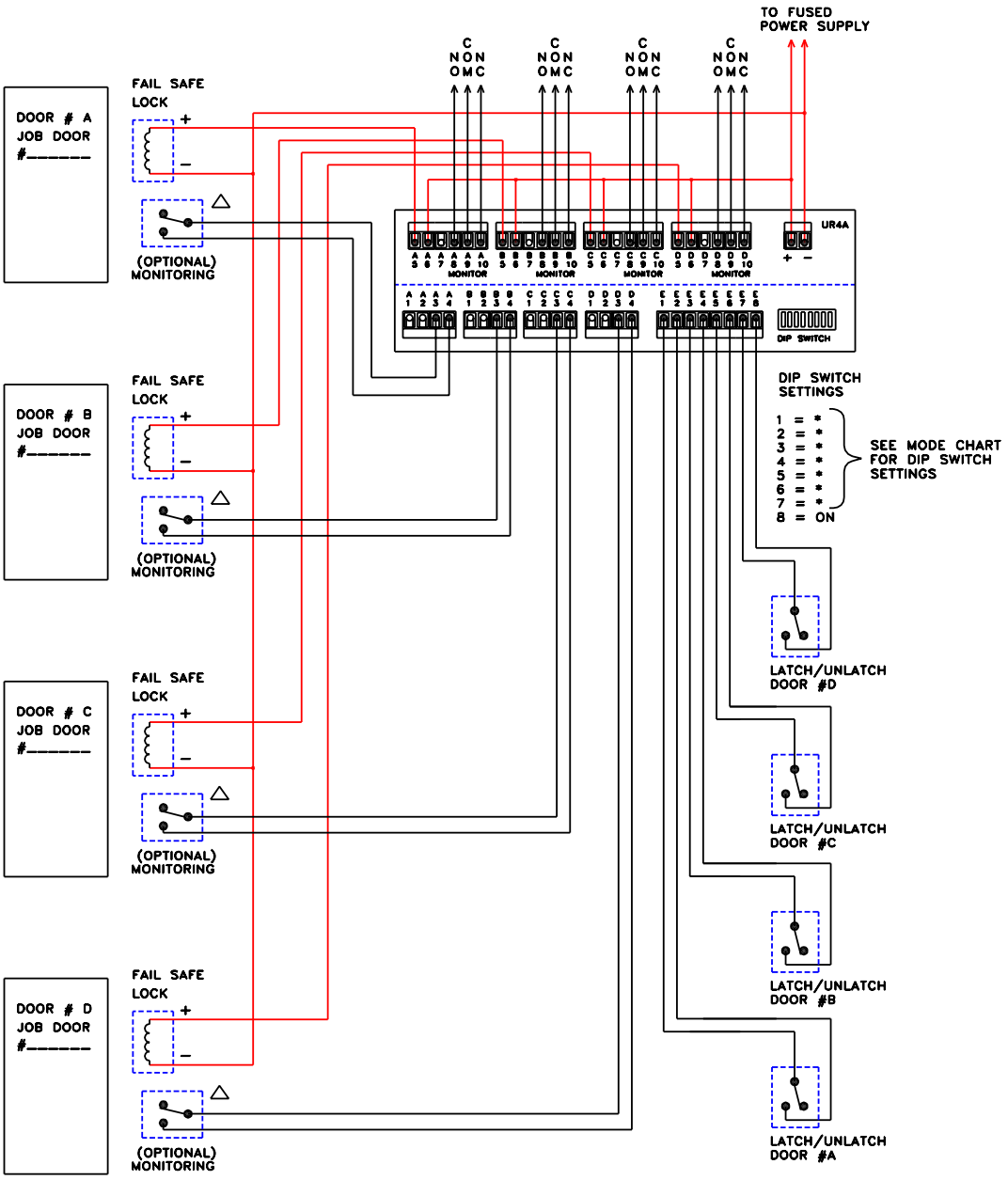

FOR POWER WIRE SIZE SEE WIRE CHART
ALL SIGNAL WIRES MUST BE 20 AWG OR LARGER.

POWER WIRES
SIGNAL WIRES

TABLE 1 - MODE DIP SWITCH SETTINGS
CONTROL MODE SW8 = ON

SW1	ON = TD/LR	OFF = CR	DOOR A
SW2	ON = TD/LR	OFF = CR	DOOR B
SW3	ON = TD/LR	OFF = CR	DOOR C
SW4	ON = TD/LR	OFF = CR	DOOR D
SW5	ON = 5 SEC.	OFF = 0	
SW6	ON = 10 SEC.	OFF = 0	
SW7	ON = 20 SEC.	OFF = 0	

TD MODE TIME SWITCH SETTING (SW5-7) ARE ADDITIVE.
MIN. TIME = 1 SEC. MAX. TIME = 35 SEC.

△ SWITCHES SHOWN WITH DOOR CLOSED

ALL WIRING MUST FIRST BE REVIEWED AND APPROVED BY THE PROJECT ENGINEER ASSIGNED TO THE LOCATION FOR IT'S CORRECTNESS AND SUITABILITY FOR THE APPLICATION IN THE LOCATION WHERE THE EQUIPMENT IS TO BE INSTALLED.

SDC SECURITY DOOR CONTROLS

TITLE
UR4A TYPICAL WIRING TD/LR MODE FOR FAIL SAFE LOCKS LR ONLY

DRN BY.	D.M.	REV.	DWG/S.O. NO.
CHKD BY.		A	2791
ORIGINATION DATE. 7-2-97			

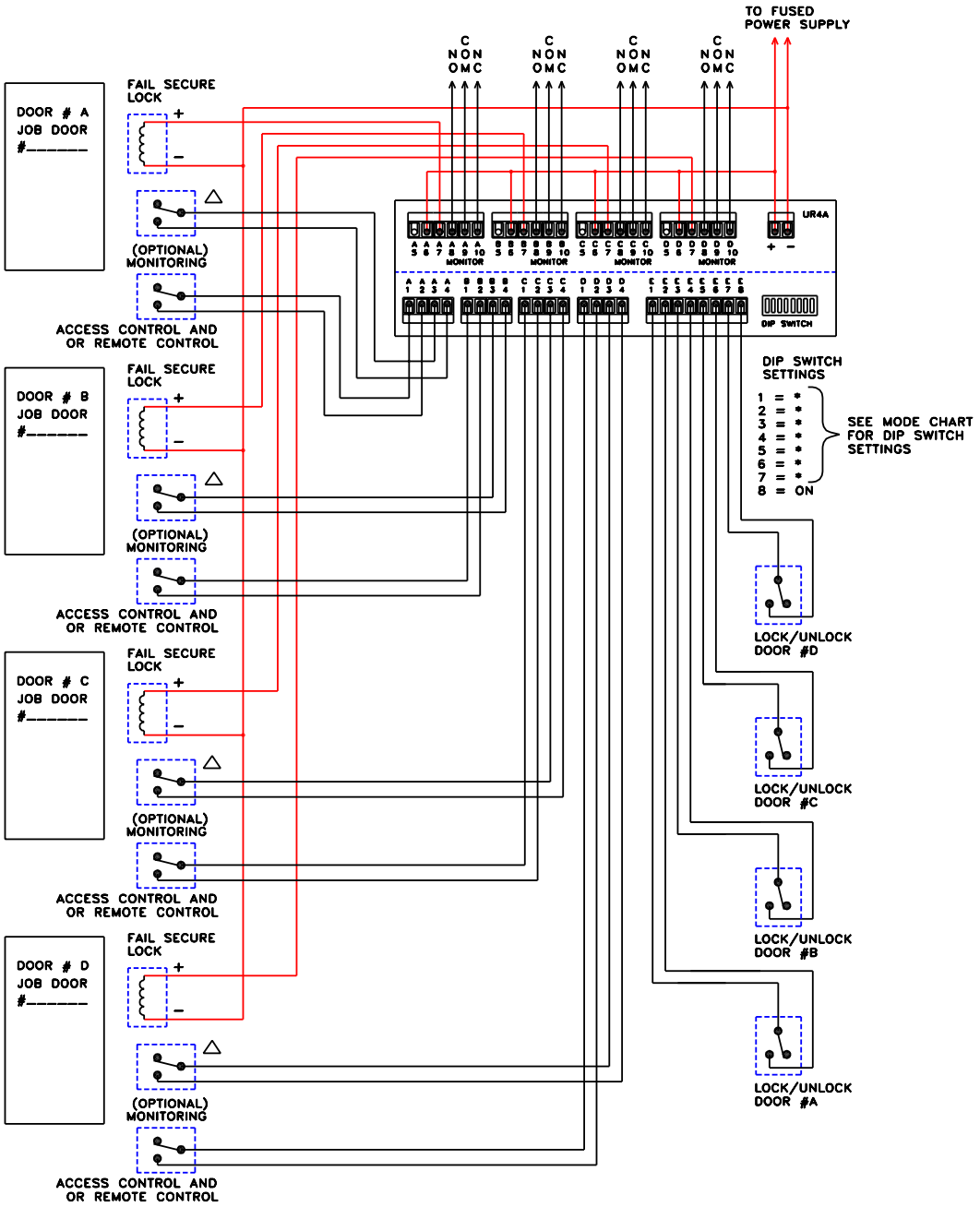

FOR POWER WIRE SIZE SEE WIRE CHART
ALL SIGNAL WIRES MUST BE 20 AWG OR LARGER.

POWER WIRES
SIGNAL WIRES

*TABLE 1 – MODE DIP SWITCH SETTINGS
CONTROL MODE SW8 = ON

SW1	ON = TD/LR	OFF = CR	DOOR A
SW2	ON = TD/LR	OFF = CR	DOOR B
SW3	ON = TD/LR	OFF = CR	DOOR C
SW4	ON = TD/LR	OFF = CR	DOOR D
SW5	ON = 5 SEC.	OFF = 0	
SW6	ON = 10 SEC.	OFF = 0	
SW7	ON = 20 SEC.	OFF = 0	

TD MODE TIME SWITCH SETTING (SW5–7) ARE ADDITIVE.
MIN. TIME = 1 SEC. MAX. TIME = 35 SEC.

△ SWITCHES SHOWN WITH DOOR CLOSED

ALL WIRING MUST FIRST BE REVIEWED AND APPROVED BY THE PROJECT ENGINEER ASSIGNED TO THE LOCATION FOR IT'S CORRECTNESS AND SUITABILITY FOR THE APPLICATION IN THE LOCATION WHERE THE EQUIPMENT IS TO BE INSTALLED.

SDC SECURITY DOOR CONTROLS

TITLE
UR4A TYPICAL WIRING TD/LR MODE FOR SECURE LOCKS

DRN BY.	D.M.	REV.	DWG/S.O. NO.
CHKD BY.		A	2791
ORIGINATION DATE. 7-2-97			

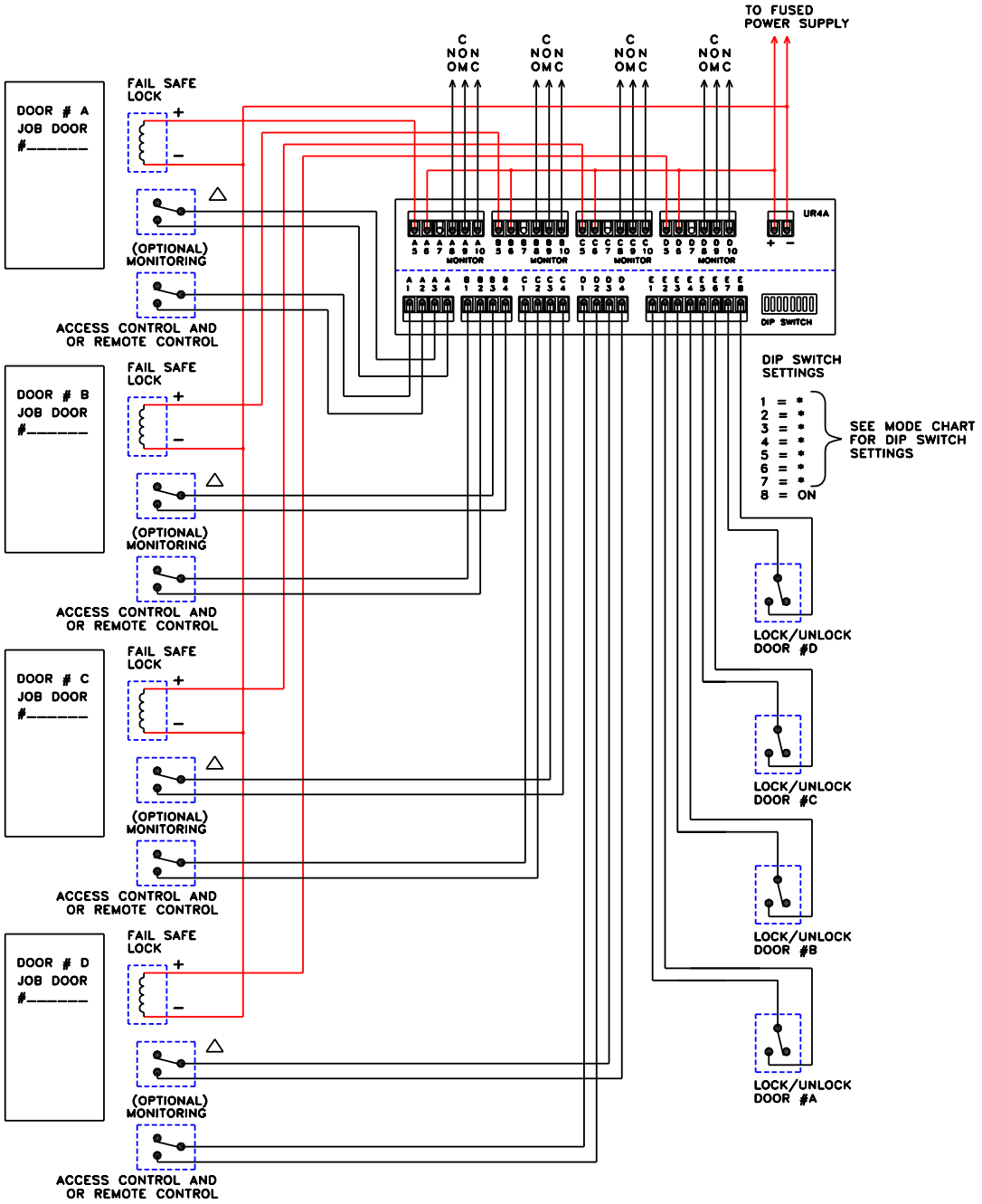

FOR POWER WIRE SIZE SEE WIRE CHART
ALL SIGNAL WIRES MUST BE 20 AWG OR LARGER.

POWER WIRES
SIGNAL WIRES

TABLE 1 – MODE DIP SWITCH SETTINGS
CONTROL MODE SW8 = ON

SW1	ON = TD/LR	OFF = CR	DOOR A
SW2	ON = TD/LR	OFF = CR	DOOR B
SW3	ON = TD/LR	OFF = CR	DOOR C
SW4	ON = TD/LR	OFF = CR	DOOR D
SW5	ON = 5 SEC.	OFF = 0	
SW6	ON = 10 SEC.	OFF = 0	
SW7	ON = 20 SEC.	OFF = 0	

TD MODE TIME SWITCH SETTING (SW5–7) ARE ADDITIVE.
MIN. TIME = 1 SEC. MAX. TIME = 35 SEC.

△ SWITCHES SHOWN WITH DOOR CLOSED

ALL WIRING MUST FIRST BE REVIEWED AND APPROVED BY THE PROJECT ENGINEER ASSIGNED TO THE LOCATION FOR IT'S CORRECTNESS AND SUITABILITY FOR THE APPLICATION IN THE LOCATION WHERE THE EQUIPMENT IS TO BE INSTALLED.

SDC SECURITY DOOR CONTROLS

TITLE
UR4A TYPICAL WIRING TD/LR MODE FOR FAIL SAFE LOCKS

DRN BY. D.M.
CHKD BY.
ORIGINATION DATE. 7-2-97

REV. A

DWG/S.O. NO. 2791

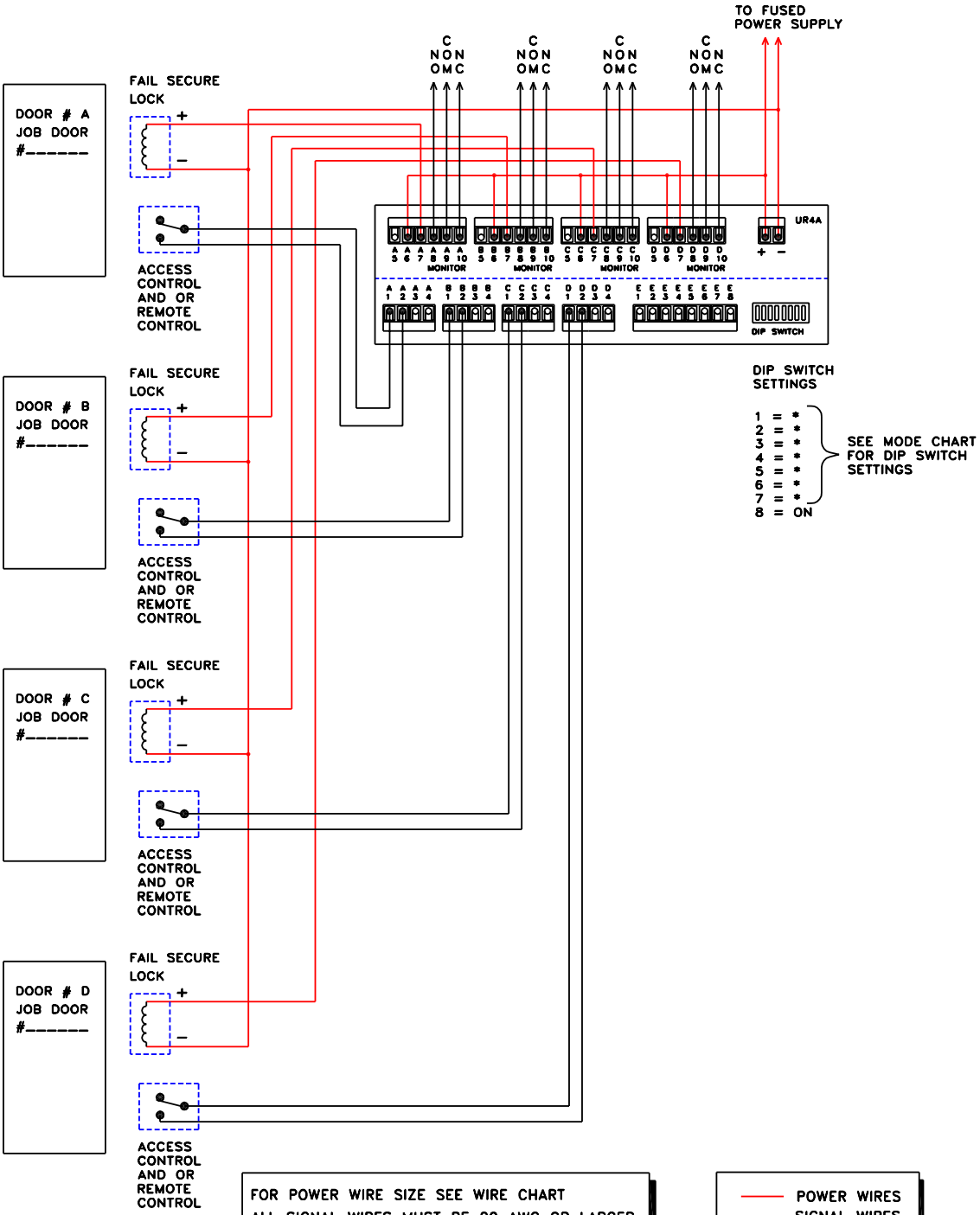

FOR POWER WIRE SIZE SEE WIRE CHART
ALL SIGNAL WIRES MUST BE 20 AWG OR LARGER.

POWER WIRES
SIGNAL WIRES

*TABLE 1 – MODE DIP SWITCH SETTINGS
CONTROL MODE SW8 = ON

SW1	ON = TD/LR	OFF = CR	DOOR A
SW2	ON = TD/LR	OFF = CR	DOOR B
SW3	ON = TD/LR	OFF = CR	DOOR C
SW4	ON = TD/LR	OFF = CR	DOOR D
SW5	ON = 5 SEC.	OFF = 0	
SW6	ON = 10 SEC.	OFF = 0	
SW7	ON = 20 SEC.	OFF = 0	

TD MODE TIME SWITCH SETTING (SW5-7) ARE ADDITIVE.
MIN. TIME = 1 SEC. MAX. TIME = 35 SEC.

ALL WIRING MUST FIRST BE REVIEWED AND APPROVED BY THE PROJECT ENGINEER ASSIGNED TO THE LOCATION FOR IT'S CORRECTNESS AND SUITABILITY FOR THE APPLICATION IN THE LOCATION WHERE THE EQUIPMENT IS TO BE INSTALLED.

SDC SECURITY DOOR CONTROLS

TITLE
UR4A TYPICAL WIRING CR MODE FOR FAIL SECURE LOCKS

DRN BY. D.M.
CHKD BY.
ORIGINATION DATE. 7-2-97

REV. A

DWG/S.O. NO. 2791

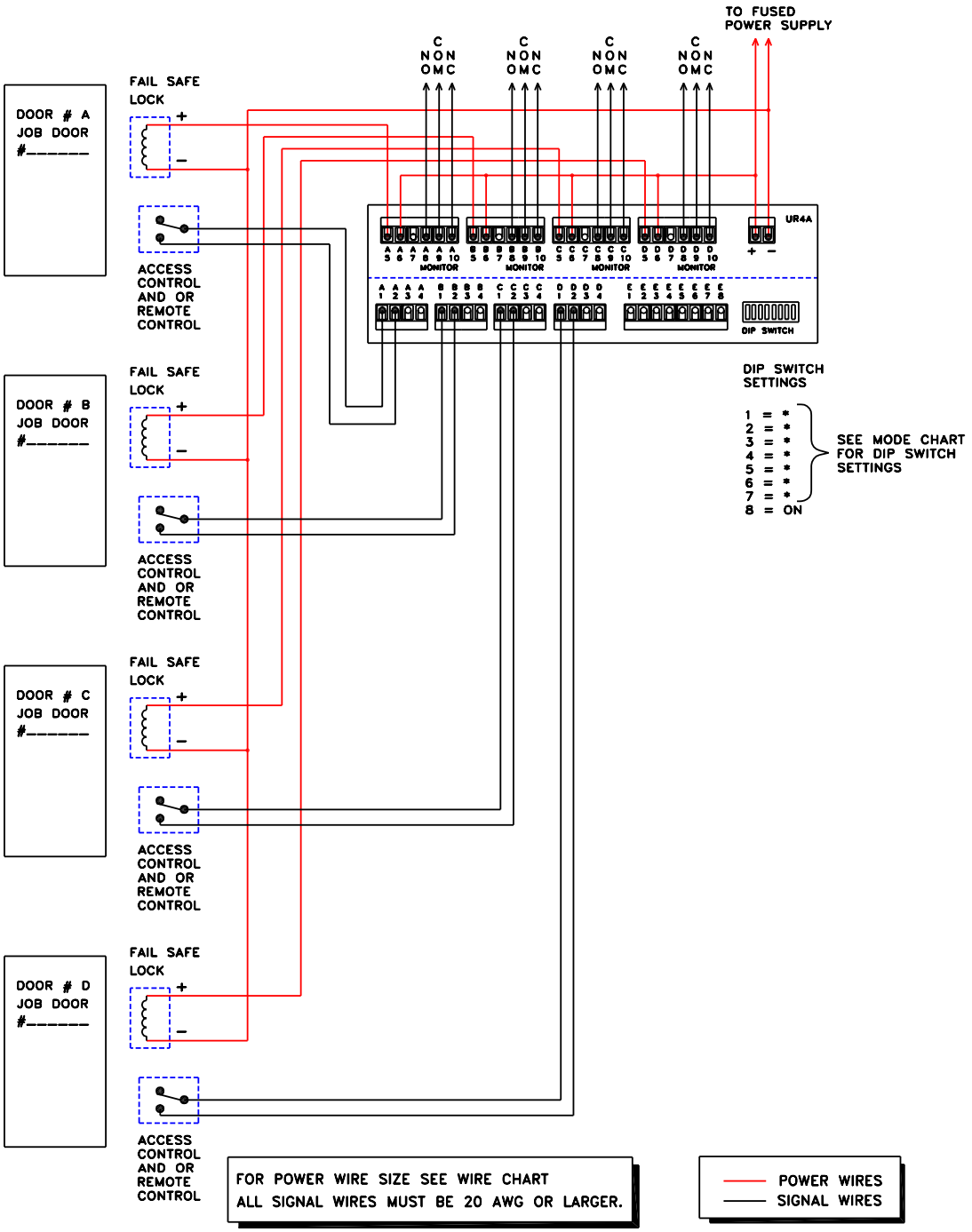

FOR POWER WIRE SIZE SEE WIRE CHART
ALL SIGNAL WIRES MUST BE 20 AWG OR LARGER.

POWER WIRES
SIGNAL WIRES

*TABLE 1 – MODE DIP SWITCH SETTINGS
CONTROL MODE SW8 = ON

SW1	ON = TD/LR	OFF = CR	DOOR A
SW2	ON = TD/LR	OFF = CR	DOOR B
SW3	ON = TD/LR	OFF = CR	DOOR C
SW4	ON = TD/LR	OFF = CR	DOOR D
SW5	ON = 5 SEC.	OFF = 0	
SW6	ON = 10 SEC.	OFF = 0	
SW7	ON = 20 SEC.	OFF = 0	

TD MODE TIME SWITCH SETTING (SW5–7) ARE ADDITIVE.
MIN. TIME = 1 SEC. MAX. TIME = 35 SEC.

ALL WIRING MUST FIRST BE REVIEWED AND APPROVED BY THE PROJECT ENGINEER ASSIGNED TO THE LOCATION FOR IT'S CORRECTNESS AND SUITABILITY FOR THE APPLICATION IN THE LOCATION WHERE THE EQUIPMENT IS TO BE INSTALLED.

SDC SECURITY DOOR CONTROLS

TITLE: UR4A TYPICAL WIRING CR MODE FOR FAIL SAFE LOCKS

DRN BY. D.M.
CHKD BY.
ORIGINATION DATE. 7–2–97

REV. A

DWG/S.O. NO. 2791