ALLEGION™

IVES®

CS Series

Covered pin and barrel continuous hinge

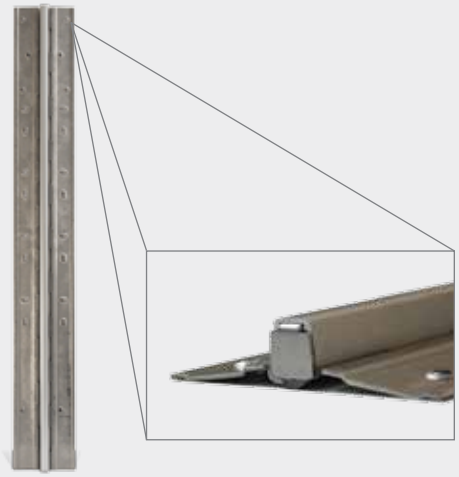

Overview

Introducing a new patented solution that brings the clean aesthetic design of aluminum geared continuous hinges to the ruggedness and safety afforded by stainless steel pin and barrel continuous hinges. Made with the same medical grade bearings found in Ives' other pin and barrel hinges, the CS (Cover System) Series brings innovation to your continuous hinge application with its great looks.

The new Ives CS Series is a heavy duty, easy-to-install, stainless steel pin and barrel continuous hinge that can be used for fire applications and is highly suitable for aftermarket or new construction situations. The patented covers hide the unsightly pin and barrel of the standard pin and barrel hinges, giving the CS Series continuous hinge a stylish appearance to accompany heavy duty performance.

The patented CS Series comes in six different finish combinations allowing you to match other door hardware. Also, the CS Series features the XY adjustability found in the Ives 157XY, which allows all lateral and vertical clearances to be adjusted after the hinge is secured to the door and frame. This reduces installation time by making alignment and adjustment of the door easier.

Features and benefits

- Grade 1 - 304, 14 gauge stainless steel, pin and barrel, continuous hinge
- Medical grade nylon winged bearings, a patented design
- Patented cover protects hinge knuckle and creates a cleaner and neater appearance
- XY adjustability feature allows for better door alignment during installation
- New thru wire panel design for full mortise applications

Configuration

- 700CS – Full mortise
- 711CS – Swing clear full mortise
- 715CS – Half wrap full mortise
- Available lengths: 83", 85", 95", or 120" nominal
- Cover finishes:
  - **441** Stainless steel, anodized
  - **600 (USP)** Primed for painting (stainless steel substrate)
  - **628 (US28)** Satin aluminum, clear anodized
  - **688 (US4)** Satin brass, anodized
  - **709** Satin bronze, anodized
  - **710 (313AN)** Dark bronze aluminum, anodized

CS Series pin and barrel continuous hinge

*Available February 1st, 2015

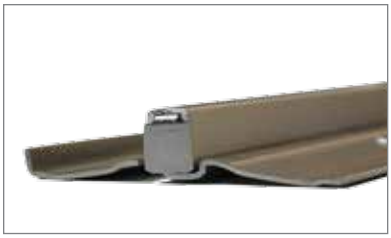

700CS
Full mortise, stainless steel pin and barrel continuous hinge

- Non handed
- 1/16" Door inset
- 600 lb. Maximum door weight
- 48" Maximum door width
- Beveled or square edge doors
- TWP - Thru wire panel available
- 1 3/4" Maximum door thickness

711CS
Swing clear full mortise, stainless steel pin and barrel continuous hinge

- Non handed
- 1/16" Door inset
- 600 lb. Maximum door weight
- 48" Maximum door width
- Square edge doors only
- 1 3/4" Maximum door thickness
- 2 11/16" Minimum frame face requirement

715CS
Half wrap full mortise, stainless steel pin and barrel continuous hinge

- Non handed
- 1/16" Door inset
- 600 lb. Maximum door weight
- 48" Maximum door width
- Square edge doors only
- 1 3/4" Maximum door thickness

Specifications

Standard	83", 85", 95", 120" Special order lengths available, consult factory
	12-24 X 3/4" Stainless steel self-drilling and self-tapping screws
Thru Wire Panel (TWP)*	Equipped with twelve, 22 gauge wires Comes with standard bottom hinge length of 34 5/8" Center line to TWP mounting is 39 13/16" Mounts with (5) - 12-24 X 3/4" Stainless steel self-drilling and self-tapping screws
Electronic Power Transfer (EPT)	Cut out available for 700CS and 715CS (use ordering template from price book)
Optional screws available	SEC – Optional hollow metal security fasteners: 12-24 X 1/2" Stainless steel machine screw Wood screw: #12 x 1 1/4" Sheet metal screw type AB - Stainless steel
Finishes (BHMA)**	**441** Stainless steel, anodized **600 (USP)** Primed for painting (stainless steel substrate) **628 (US28)** Satin aluminum, clear anodized **688 (US4)** Satin brass, anodized **709** Satin bronze, anodized **710 (313AN)** Dark bronze aluminum, anodized

*Available for 700CS only
**Special paint finishes for cover available, please consult factory

About Allegion

Allegion (NYSE: ALLE) creates peace of mind by pioneering safety and security. As a $2 billion provider of security solutions for homes and businesses, Allegion employs more than 8,000 people and sells products in more than 120 countries across the world. Allegion comprises 25 global brands, including strategic brands CISA®, Interflex®, LCN®, Schlage® and Von Duprin®. For more, visit **www.allegion.com.**

aptiQ ■ LCN ■ SCHLAGE ■ STEELCRAFT ■ VON DUPRIN

ALLEGION™

© 2014 Allegion
010510, Rev. 09/14
www.allegion.com/us