921005-00

994/996L-DT/L

VON DUPRIN

Rigid Trim

Installation Instructions

1. Prepare door for exit device. See exit device instructions for line X-X, exit device center line, and exit device side door cutouts.
2. Prepare door for trim:
   a. Transfer line X-X from exit device side of door to trim side. Use extra care if door is beveled. Be sure line X-X is parallel to edge of door.
   b. Locate and prepare all holes as shown.
3. If necessary, change trim handing.
4. **For RIGID function trim with rim or vertical rod device:**
   a. Install rim cylinder (Figure 2).
   b. Cut cylinder tailpiece to extend 7/16” to 9/16” out of exit device side of door.
   c. Install tailpiece guide in exit device cam.
5. **For RIGID function trim with mortise lock device:** Install mortise lock.
6. Install exit device and trim. Use 1-3/8” screws for 1-3/4” door, 1-7/8” screws for 2” and 2-1/4” door (cut down screws for 2” door if necessary).
7. **For RIGID function trim with mortise lock device:** Install mortise cylinder (Figure 2).

⚠ NOTE ⚠

Lever cannot be broken down in this application without breaking the shear pin.

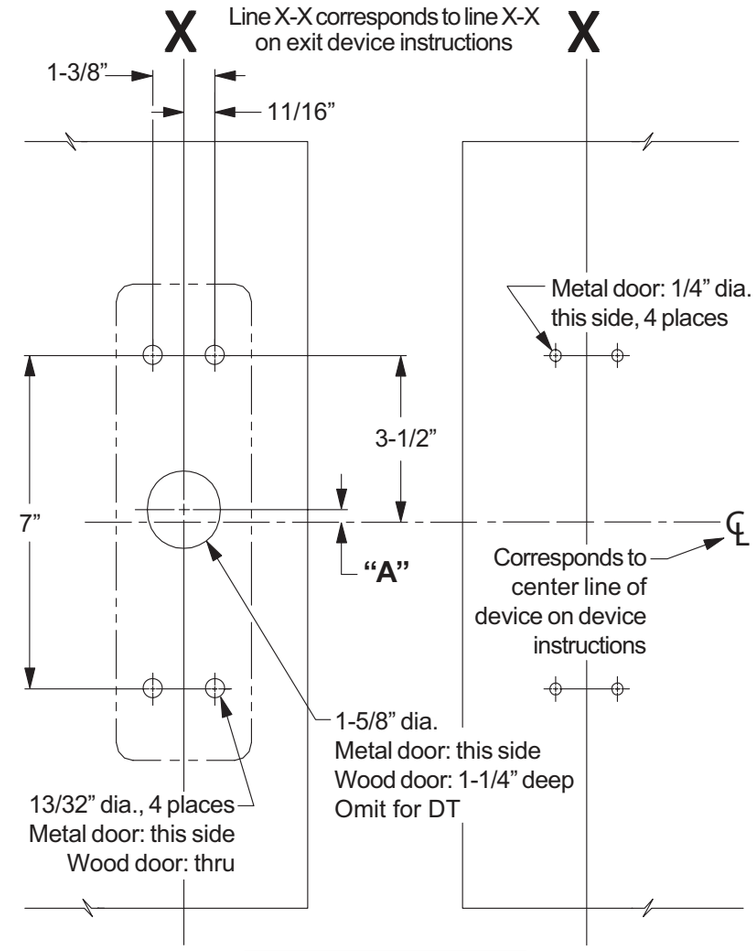

Device	“A”
Rim or vertical rod	1/4”
Mortise lock	2-1/4”

LHR shown, RHR opposite

TO CHANGE HANDING

1. Remove retaining ring using retaining ring pliers (Figure 1).
2. Loosen but **do not remove** DT yoke set screws using 3/32” hex wrench.
3. Remove DT yoke.
4. Rotate lever to LHR or RHR position.
5. Re-install DT yoke in the same orientation.
6. Tighten DT yoke set screws.
7. Re-install retaining ring.

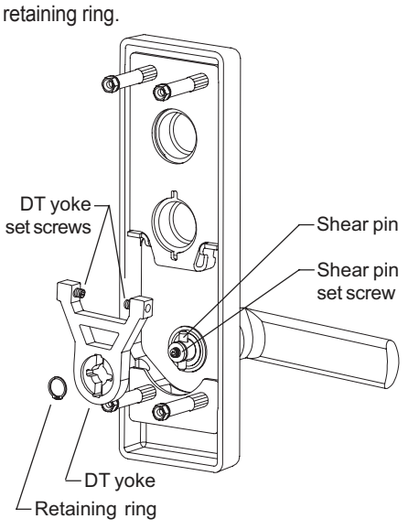

Figure 1

TO REPLACE SHEAR PIN

1. Loosen but **do not remove** shear pin set screw using 3/32” hex wrench (Figure 1).
2. Remove retaining ring using retaining ring pliers.
3. Loosen but **do not remove** DT yoke set screws using 3/32” hex wrench.
4. Remove DT yoke.
5. Remove broken shear pin.
6. Install new shear pin.
7. Re-install DT yoke in the same orientation.
8. Tighten DT yoke set screws.
9. Re-install retaining ring.
10. Tighten shear pin set screw.

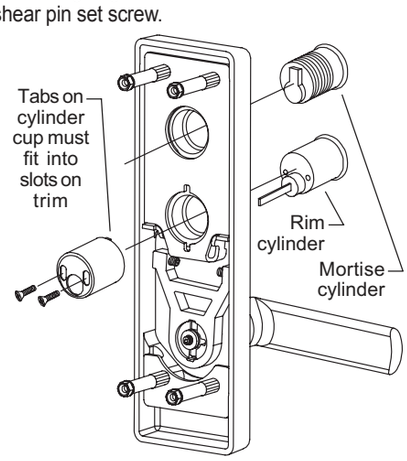

Figure 2

Customer Service

1-877-671-7011 www.allegion.com

ALLEGION

© Allegion 2014
Printed in U.S.A.
921005-00 Rev. 01/14-b