# Electric Hinge Installation Instructions

## Concealed Electric Through Wire (ETW)
## Concealed Electric Monitor (EMN)
## Concealed Electric Through Wire with Monitor (ETM)

DISTRIBUTED BY AHS ACCESS HARDWARE SUPPLY accesshardware.com

**Please note:**
Do not remove pin or attempt to disassemble hinge.
Electric hinges should always be installed in the center hinge location.
For grout filled frame use Hager mortar box.
**Failure to follow these instructions will void warranty.**

Hager Electric Hinges are listed with Underwriters Laboratories, Inc. Category: Connectors and Switches (AMQV, AMQV7)

### I. DOOR AND FRAME PREPARATION

Drill a 1" diameter hole in the frame (all applications) and 3/4" diameter hole(s) in the door (ETW & ETM). See Figure 1. 3 knuckle hinges require two 3/4" holes, 5 knuckle hinges one. Deburr the hole to prevent damage to the wire.

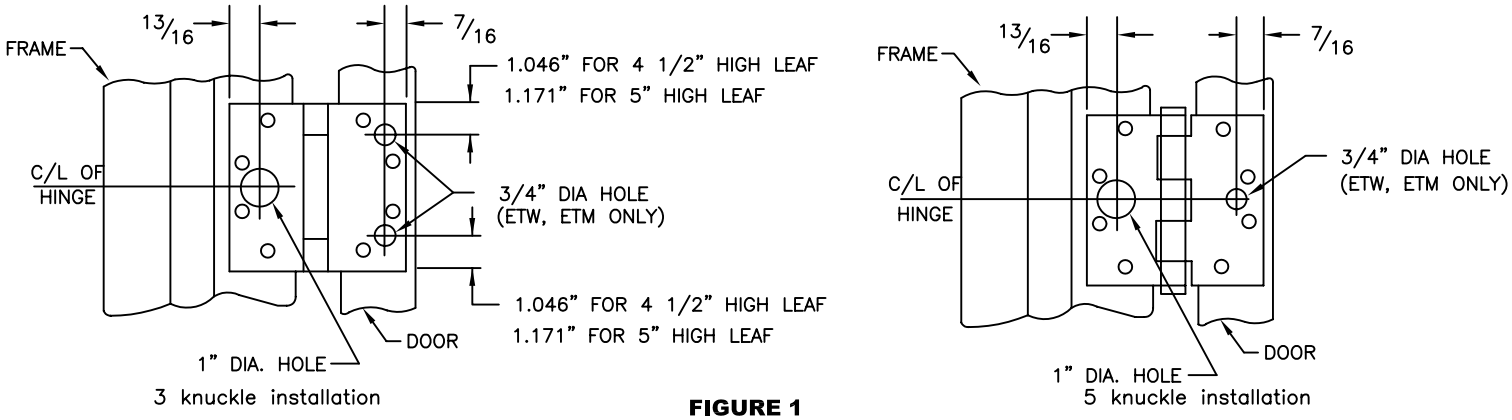


**FIGURE 1**

### II. INSTALLATION

Attach wires from hinge to the appropriate wires as described in the wiring diagram supplied for your project by others. Insulate bare ends of any unused wires. See Figure 3 for schematic.

**Check the fit of the hinge in the door and frame preparation. The hinge must fit easily in the mortise and not bind when fully installed. Forcing the hinge into a faulty preparation by hammering or bending can cause serious damage and/or shortened life.**

Carefully slide wires back through the access holes in the door and frame. Make sure that the wires are placed so they will not be cut or pinched as installation is completed. See Figure 2.

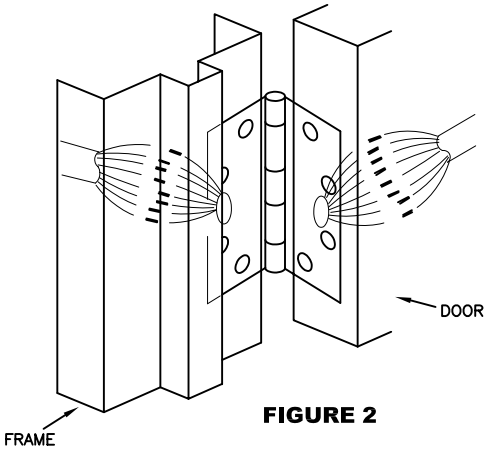


**FIGURE 2**

### III. WIRING METHODS

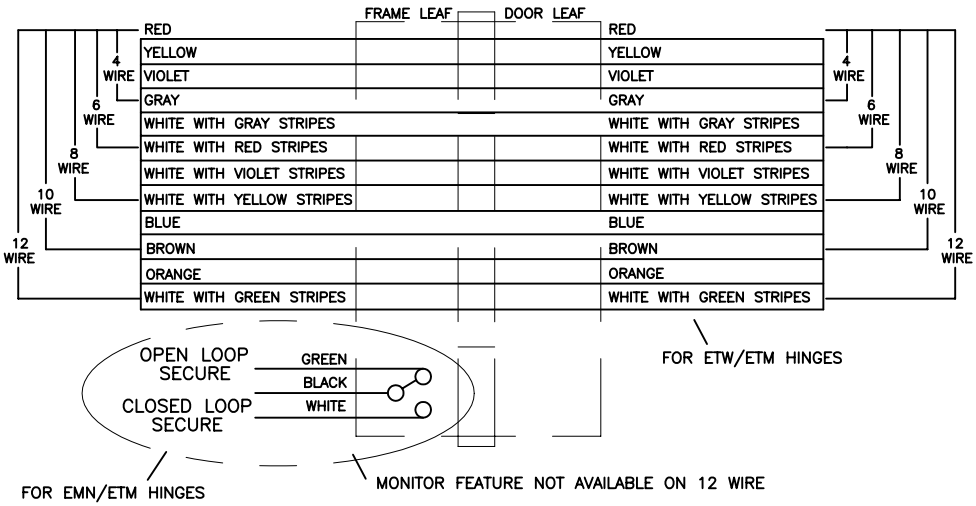


**FIGURE 3**

**EMN and ETM ONLY**

**"Closed Loop Secure"**
(Use black and white wires)
Closed Loop Secure hinges are wired so that when the door is closed (secured) the EMN/ETM switch is closed (passes current). When the door opens an open circuit is detected as an alarm.

**"Open Loop Secure"**
(Use black and green wires)
Open Loop Secure hinges are wired so that when the door is closed (secured) the EMN/ETM switch is open (does not pass current). When the door opens a closed circuit is detected as an alarm.

(over)

# Electric Hinge Installation Instructions

**Concealed Electric Through Wire (ETW)**
**Concealed Electric Monitor (EMN)**
**Concealed Electric Through Wire with Monitor (ETM)**

DISTRIBUTED BY AHS ACCESS HARDWARE SUPPLY accesshardware.com

## IV. ADJUSTMENT (EMN/ETM ONLY)

All EMN/ETM hinge monitoring circuits are pre-adjusted to a 3/8" gap at the factory. See Figure 4.

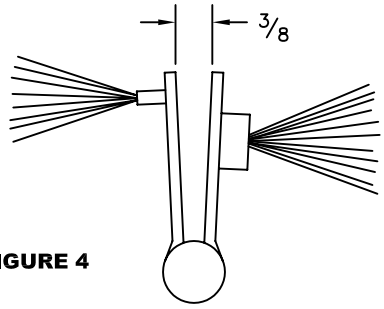


**FIGURE 4**

**MAX.**
**ELECTRICAL RATING**
**SWITCH**

30 VDC @ .500 amps

**CONTACT THROUGH WIRE**

| | |
|---|---|
| VOLTS | 48V DC/AC |
| AMPERES | 3.5 A CONTINUOUS CURRENT |
| | 16.0 A CURRENT INRUSH (300 MILLISECONDS) |

**CAUTION:** Hinge **cannot** be adjusted when mounted to the frame.

**Failure to follow these instructions may result in damage to the hinge.**

**Removal and adjustment:**
Open door and remove screws from frame leaf. Carefully pull hinge away from frame until the connected wires are exposed. Disconnect the black and white wires for closed loop wiring or the black and green wires for the open loop wiring.

Set an ohmmeter to the resistance scale. Connect the black and either the white or green wires to the ohmmeter. See Figure 5.

Slowly close hinge until the circuit is made. The ohmmeter will indicate either an open or closed circuit when the hinge leaves are closed.

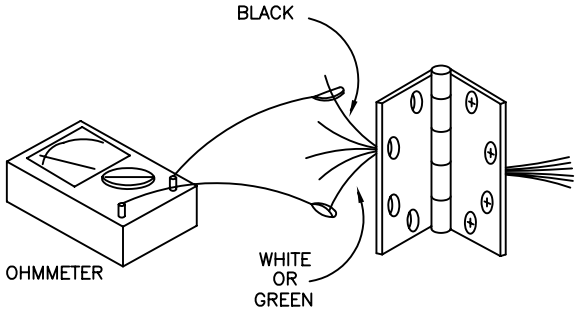


**FIGURE 5**

Adjustments to the monitoring gap are made by turning the adjusting screw using the adjusting tool included with the hinge. The adjustment screw is reached through the hole centered in the edge of the leaf. See Figure 6.

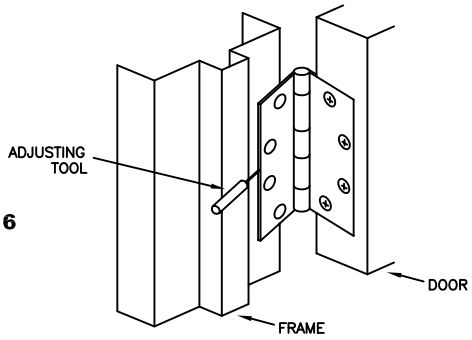


**FIGURE 6**

To adjust the gap, open hinge, insert the adjusting tool and turn one (1) turn **clockwise** to **decrease** the gap or **counterclockwise** to **increase** the gap. Recheck gap with ohmmeter by slowly closing hinge. Repeat procedure until the desired gap is achieved. See figure 6.

**CAUTION:** Do not adjust so that the screw extends beyond the edge of the hinge leaf.

**HAGER COMPANIES**
**139 VICTOR STREET**
**P.O. BOX 12300**
**ST. LOUIS, MISSOURI 63157-0300**
**www.hagerco.com**