# Cylinder-Operated Flushbolt

## *For Wood Doors*

# 1877

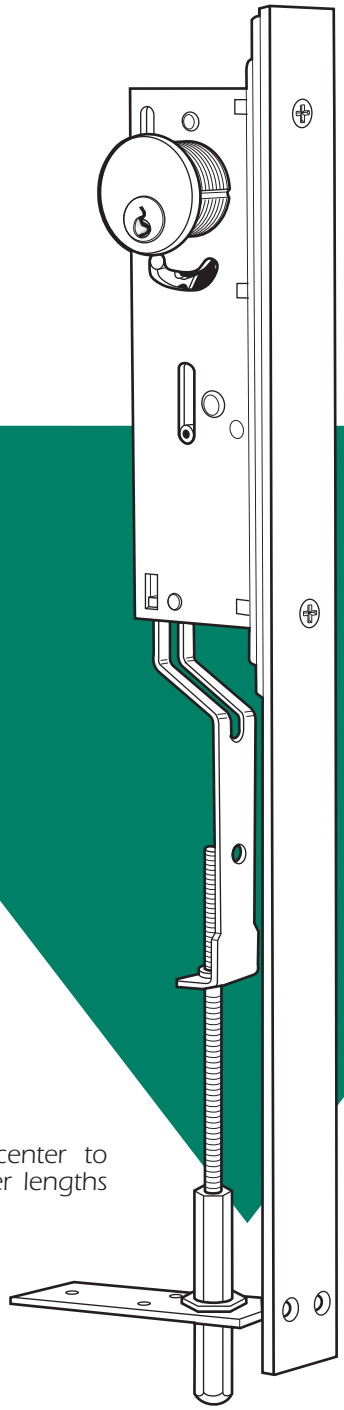

*MAY BE INSTALLED TO LOCK AT THRESHOLD OR AT HEADER.*

### Cylinder Backset

1-1/4" only.

### Cylinder Height

Standard length (cylinder center to door edge) is 13-1/2". Other lengths available on special order.

### Case

Steel with corrosion-resistant plating. 1" x 6" x 1-29/32".

### Function

Designed for use instead of conventional flip-lever operated flushbolts, the 1877 gives building management key control of the inactive leaf of paired doors. Prevents casual locking of the inactive leaf by children or other unauthorized persons. Uses same basic overcenter action mechanism as MS® pivoted bolt locks. Recommended for installation at both top and bottom of inactive door with MS1837 in active door for greatest security.

### Armored Faceplate

1-1/4" x 15-3/8". Finish: US28 Clear Anodized (628). Contact factory for other available finishes, including brass.

### Bolt

Hexagonal 3/8" flat to flat, with 11/16" throw. Made of stainless steel.

### Strike

2-1/4" x 15/16" strike is supplied.

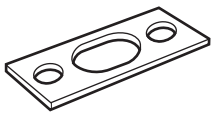

### Operation

360° turn of key throws or retracts hardened hex-section bolt. Key can be removed only when bolt is in a positively locked or unlocked position. Accepts any standard 1-5/32" mortise cylinder from either or both sides. Cylinder must have MS® cam. (See page SW-33.)

Adams Rite
ASSA ABLOY

260 Santa Fe Street
Pomona, California 91767
(800) 872-3267 Fax:(800) 232-7329
www.adamsrite.com

# 1877 Flushbolt

## *For Wood Doors*

## DIMENSIONS

**INCHES**
MILLIMETERS
*Nominal, subject to tolerance extremes.*

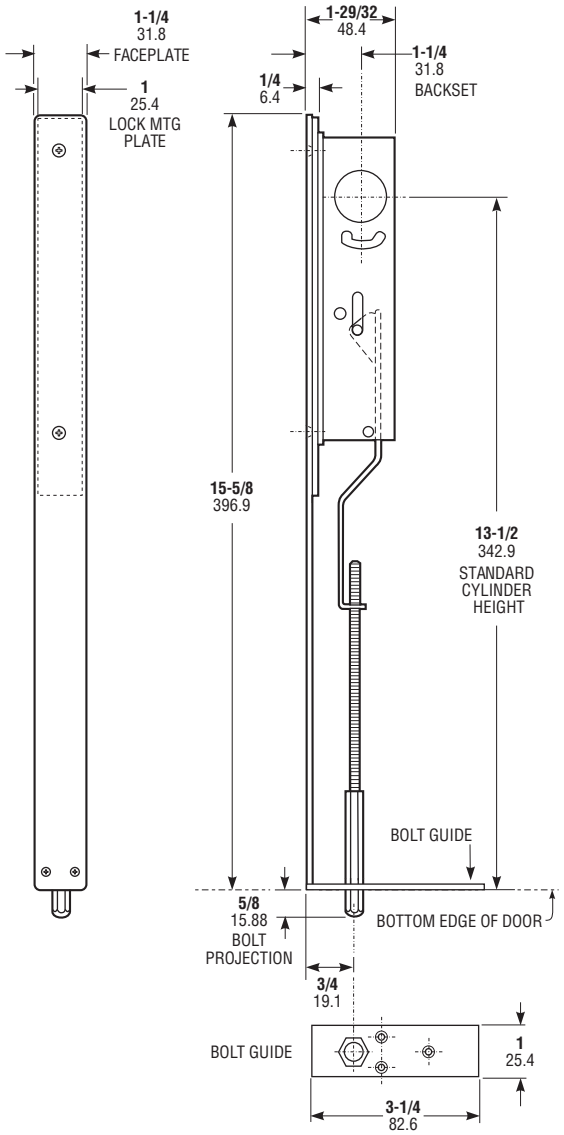


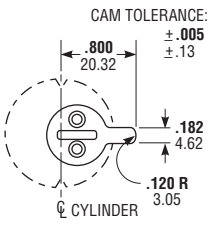


### Cylinder Cam

1877 locks are operable by any standard 1-5/32" diameter mortise cylinder with special MS® cam dimensioned as shown. Cylinders with MS® cams can be readily obtained from most cylinder manufacturers. See page SW-33 for cylinder make and trim ring information.

## INSTALLATION

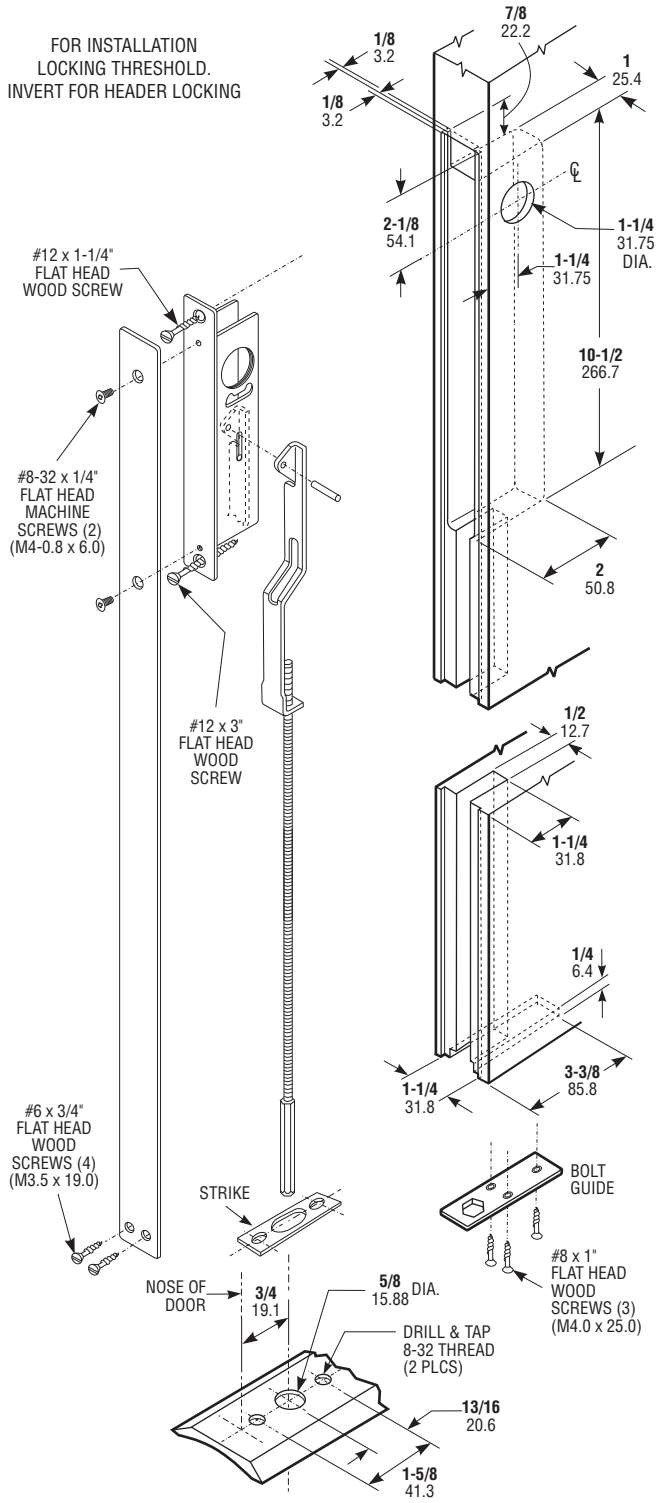


## HOW TO ORDER

*Specify quantity and catalog number.*
*Order related hardware separately.*

**1877 - 628**

| Finish | |
|---|---|
| **628** | Clear Anodized |
| **313** | Dark Bronze Anodized |
| **605** | Bright Brass |

## STANDARD PACKAGE

Basic lock mechanism boxed with actuator arm attached, rod/bolt assembly unattached. Stainless steel bolt guide, mounting screws and installation instructions included. Cylinders available at extra cost. Shipping weight: 1-1/4 lbs.

©2008 ADAMS RITE MANUFACTURING CO.