Exit Device

DORMA 9000

DORMA's 9000 Series heavy-duty exit devices provide superior durability for high impact applications such as schools, universities, and other institutional or commercial buildings.

The heavy-duty cast chassis provides superior durability, while the smooth reduced projection touchbar assembly minimizes catch hazards. The partial length touchpad permits field installation of options such as cylinder dogging and exit alarm. A full complement of free wheeling lever trim is available in a wide range of architectural finishes.

Certification:
The DORMA 9000 Series is listed by U.L. and C.U.L. under their continuing reinspection programs and conforms to standards U.L. 10C and U.B.C. 7-2 (1997) positive pressure testing. The DORMA 9000 Series is BHMA-certified to the requirements of ANSI A156.3 for Grade 1 exit devices.

Miami-Dade County Florida acceptance No. 06-912.05. Expires 01/03/2012.

Specification:
All exit devices shall be DORMA 9000 Series rim, mortise, surface, or concealed vertical rod devices. All devices to have heavy-duty cast chassis. All device touchbar, rail, and cover assemblies shall be constructed of heavy gauge solid wrought materials for true architectural finishes or color coated finishes where applicable. The partial-length touchpad assembly shall permit field installation of options such as cylinder dogging and exit alarm. Non-labeled units to have hex-key dogging standard. Fire rated versions shall be available for labeled applications. All surface vertical rod devices shall have pullman type top latch bolts and round slidebolt bottom latches. All devices to have deadlocking latch bolts with 3/4" throw where applicable. All units shall offer a full range of free wheeling operational trim, except mortise devices. All units shall offer optional rigid and clutch-style trim, where applicable. All devices to be furnished with appropriate mounting hardware including both wood and machine screws, as well as sex nuts where required.

Optional Specifications:
Non-labeled devices to have cylinder dogging. Mortise cylinder included. Specify **CD**.

All surface/concealed vertical rod devices to have pullman type bottom latch bolt. Specify **PB**.

All surface/concealed vertical rod devices to have extended top rod up to 10'. Specify **ETR**.

All surface/concealed vertical rod devices to be furnished less bottom rod. Specify **LB**.

Devices to have electric latch bolt retraction to provide remote access from the secure side of door. Can also be used in conjunction with low energy/automatic door operator. Specify **ES. (ES must be powered by PS-501 power supply and use ES-105 power transfer)**.

Devices to have a latch monitor to report the latch bolt status. Specify **LM**.

Devices to be furnished with two switches in the touchbar to provide notification when touchbar is depressed. Specify **MS**.

Devices to have latch monitor with monitor switches in touchbar. Specify **LM/MS**.

Devices to have latch monitor with monitor switches and a bypass to permit authorized exit. Specify **LM/MS BP**.

Devices to have one of the following exit alarm options: battery-powered exit alarm (**BPA**), battery-powered exit alarm with a 4-minute reset (**BPAR**), or direct hard-wired exit alarm (**DWA**).

Devices to use a glass lite shim kit to raise the device from the door surface to accommodate glass light molding. Specify **GK9000**.

All devices for labeled wood or composite doors to be furnished with sex bolts. Specify **SNB**.

All concealed vertical rod exit devices installed in wood doors to be furnished with appropriate brackets, fasteners, and templates for wood door applications. Specify **WD** (9100 only).

All concealed vertical rod devices installed in aluminum doors to be furnished with appropriate brackets for aluminum door applications. Specify **ALD** (9100 only).

All devices to use tamper-resistant security screws. Specify **TX**.

All devices to be furnished with rigid trim. Specify **R** after trim number.

All devices to be furnished with clutch-style lever trim. Specify **C** after lever trim number.

Finishes

Architectural Finishes:
Brass: 605 (Bright) or 606 (Satin).
Bronze: 611 (Bright), 612 (Satin), or 613 (Oxidized Satin Oil Rubbed).
Chrome: 625 (Bright) or 626 (Satin).
Stainless Steel: 630 (Satin).

Powder Coated Finishes:
Aluminum: 689.
Bronze: 691 (Dull) or 695 (Dark Duranodic).
Gold: 696.

Warranty:
10 Years - Mechanical.
2 Years - Electronic integral components and accessories.

The quality management system at the Steeleville, IL facility is certified to ISO-9001:2000.*

*DORMA Door Controls Inc., dba: DORMA Architectural Hardware

General Information

- Partial width touchbar and rail, chassis, and latch bolt covers are fabricated from brass, bronze, aluminum, steel, or stainless steel.
- End cap for touchbar assembly furnished in complementary finish.
- Some models handed depending on outside operating trim and function.
- Most devices easily field-reversible.
- Fasteners provided for metal and wood door applications.
- Free wheeling, vandal-resistant trim standard.

Data and Features	Model 9100	Model 9300	Model 9400	Model 9500
U.L. Listed for Hazard	•	•	•	•
U.L. Listed for Labeled Fire Doors (prefix F)	○	○	○	○
Size “A” Doors (34"–48") (touchpad 24-5/8")	○	○	○	○
Size “B” Doors (28"–36") (touchpad 18-5/8")	•	•	•	•
Size “C” Doors (25"–30") (touchpad 15-5/8")	○	○	○	○
Door Height up to 7'	•	NA	•	NA
Door Height up to 8'	•	NA	○	NA
Door Height up to 10' (specify ETR)	○	NA	○	NA
Door Thickness 1-3/4" to 2-1/4"	•	•	•	•
Device Non-Handed	NA	•	NA	NA
Device Handed but Field Reversible	•	NA	•	NA
Device Handed, Not Reversible	NA	NA	NA	•
Hex Key Dogging (non-listed units only)	•	•	•	•
Cylinder Dogging (non-listed units only)	○	○	○	○
Round Bottom Slide Bolt	•	NA	•	NA
Deadlocking Pullman Type Bottom Latch Bolt (specify PB)	○	NA	○	NA
Less Bottom Rod (specify LB)	○	NA	○	NA
Electric Latch Bolt Retraction (specify ES)	○	○	○	NA
Monitor Switch in Touchbar (specify MS)	○	○	○	○
Latch bolt Monitor (specify LM)	○	○	○	○
Latch Monitor/Monitor Switch (specify LM/MS)	○	○	○	○
Latch Monitor/Monitor Switch with Bypass (specify LM/MS BP)	○	○	○	○
Exit Alarm (specify BPA, BPAR or DWA)	○	○	○	○
Delayed Egress 15 sec (Specify DE suffix)	○	○	NA	○
Clutch Style Lever Trim (Specify C suffix)	○	○	○	○
Magnetic Dogging (Specify MD)	○	○	○	○
Glass Lite Shim Kit (Specify GK9000)	○	○	○	○
Security Screws (Specify TX)	○	○	○	○
Sex Nuts (Specify SNB/Quantity)	○	○	○	○
Hurricane Code Rated (specify HC)	NA	○	○	○

• Standard Feature ○ Optional Feature NA - not applicable

Handing

Right-Hand Reverse Bevel (RHRB)

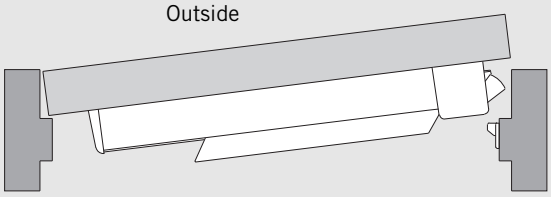

Left-Hand Reverse Bevel (LHRB)

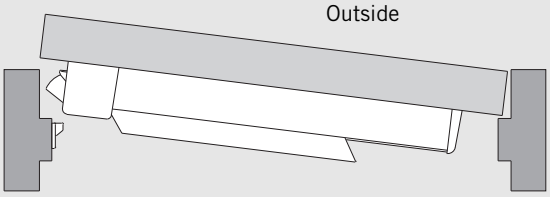

ANSI Function	Function Description	Type 1 Rim Exit Device	Type 2 Surface Vertical Rod Exit Device
01	Exit Only – No Trim	9300 or F9300	9400 or F9400
02	Entrance by trim when actuating bar is locked down.	9300 × (trim) V102/V302 PTT02/PRT02 YR02R/YT02R/YC02R/YK02R	9400 × (trim) V102/V302 PTT02/PRT02 YR02R/YT02R/YC02R/YK02R
03	Entrance by trim when latch bolt is retracted by key. Key removable only when locked.	9300 or F9300 × (trim) VO03/V103/V303, YO03 NPT03/PTT03/PRT03 YR03R/YT03R/YC03R/YK03R R03/R03IC/C03/C03IC/K03/K03IC POF03HDA	9400 or F9400 × (trim) VO03/V103/V303, YO03 NPT03/PTT03/PRT03 YR03R/YT03R/YC03R/YK03R R03/R03IC/C03/C03IC/K03/K03IC —
04	Entrance by trim when latch bolt is retracted by key or set in retracted position by key.	CD9300 × (trim) VO03/V103/V303, YO03 NPT03/PTT03/PRT03 YR03R/YT03R/YC03R/YK03R R03/R03IC/C03/C03IC/K03/K03IC POF03HDA	CD9400CD × (trim) VO03/V103/V303, YO03 NPT03/PTT03/PRT03 YR03R/YT03R/YC03R/YK03R R03/R03IC/C03/C03IC/K03/K03IC —
05	Entrance by thumbpiece. Key locks or unlocks thumbpiece.	9300 or F9300 × (trim) HTT05/HRT05	9400 or F9400 × (trim) HTT05/HRT05
06	Entrance by thumbpiece only when released by key. Key removable only when locked.	9300 or F9300 × (trim) HTT06/HRT06	9400 or F9400 × (trim) HTT06/HRT06
08	Entrance by knob or lever. Key locks or unlocks knob or lever.	9300 or F9300 × (trim) YR08/YT08/YC08/YK08 YR08C/YT08C/YC08C R08/R08IC/C08/C08IC/K08/K08IC	9400 or F9400 × (trim) YR08/YT08/YC08/YK08 YR08C/YT08C/YC08C R08/R08IC/C08/C08IC/K08/K08IC
08x08	Entrance by lever. OS or IS key locks or unlocks lever.	F9300 × (trim) YR08x08	— —
09	Entrance by knob or lever only when released by key. Key removable only when locked.	9300 or F9300 × (trim) YR09/YT09/YC09/YK09 YR09C/YT09C/YC09C	9400 or F9400 × (trim) YR09/YT09/YC09/YK09 YR09C/YT09C/YC09C
22	Entrance by thumbpiece (no cylinder). Trim always active.	9300 or F9300 × (trim) HRT22/HTT22	9400 or F9400 × (trim) HRT22/HTT22
23	Entrance by knob or lever (no cylinder). Trim always active.	9300 or F9300 × (trim) YC23/YR23/YT23/YK23 C23/R23/K23	9400 or F9400 × (trim) YC23/YR23/YT23/YK23 C23/R23/K23

ANSI Function	Function Description	Type 3 Mortise Exit Device	Type 7/8 Wood/Metal Door Concealed Vertical Rod Exit Device
01	Exit Only – No Trim	9500 or F9500	9100 or F9100
02	Entrance by trim when actuating bar is locked down.	9500 × (trim) V102M/V302M PTT02M/PRT02M YR02R/YT02R/YC02R/YK02R	9100 × (trim) V102CV/V302CV PTT02CV/PRT02CV YR02R/YT02R/YC02R/YK02R
03	Entrance by trim when latch bolt is retracted by key. Key removable only when locked.	9500 or F9500 × (trim) VO03M/V103M/V303M, YO03M NPT03M/PTT03M/PRT03M YR03MR/YT03MR/YC03MR/YK03MR —	9100 or F9100 × (trim) VO03CV/V103CV/V303CV, YO03 NPT03CV/PTT03CV/PRT03CV YR03R/YT03R/YC03R/YK03R R03/R03IC/C03/C03IC/K03/K03IC
04	Entrance by trim when latch bolt is retracted by key or set in retracted position by key.	CD9500 × (trim) VO03M/V103M/V303M, YO03M NPT03M/PTT03M/PRT03M YR03MR/YT03MR/YC03MR/YK03MR —	CD9100 × (trim) VO03CV/V103CV/V303CV, YO03 NPT03CV/PTT03CV/PRT03CV YR03R/YT03R/YC03R/YK03R R03/R03IC/C03/C03IC/K03/K03IC
05	Entrance by thumbpiece. Key locks or unlocks thumbpiece.	9500 or F9500 × (trim) HTT05M/HRT05M	9100 or F9100 × (trim) HTT05CV/HRT05CV
06	Entrance by thumbpiece only when released by key. Key removable only when locked.	— —	9100 or F9100 × (trim) HTT06CV/HRT06CV
08	Entrance by knob or lever. Key locks or unlocks knob or lever.	9500 or F9500 × (trim) YR08M/YT08M/YC08M/YK08M YR08MC/YT08MC/YC08MC —	9100 or F9100 × (trim) YR08/YT08/YC08/YK08 YR08C/YT08C/YC08C R08/R08IC/C08/C08IC/K08/K08IC
09	Entrance by knob or lever only when released by key. Key removable only when locked.	— — —	9100 or F9100 × (trim) YR09/YT09/YC09/YK09 YR09C/YT09C/YC09C
22	Entrance by thumbpiece (no cylinder). Trim always active.	9500 or F9500 × (trim) HRT22M/HTT22M	9100 or F9100 × (trim) HRT22CV/HTT22CV
23	Entrance by knob or lever (no cylinder). Trim always active.	9500 or F9500 × (trim) YC23M/YR23M/YT23M/YK23M —	9100 or F9100 × (trim) YC23/YR23/YT23/YK23 C23/R23/K23

How to Order

To order, list options, model number, trim, strikes, hand, and finish.

Latch Monitor
Fire Rated for labeled fire doors
9000 Series Exit Device
Device Size

LM × F 9400B × V103 × 426/439 × RHR × 630

Options | Model | Trim | Strikes | Hand | Finish

Options: **(R)** Rigid Trim
(C) Clutch Style Lever Trim
(BPA) Battery Powered Exit Alarm
(BPAR) Battery Powered Exit Alarm, (4) minute reset
(DWA) Direct Wired Exit Alarm
(CD) Cylinder Dogging
(ES) Latch Retraction (9100, 9300, 9400)
(ETR) Top Rod Extension (9100,9400)
(GK9000) Glass Lite Shim Kit
(LB) Less Bottom Rod (9100, 9400)
(LM) Latch Monitor
(MD) Magnetic Dogging
(MS) Monitor Switch
(LM/MS) Latch Monitor/Monitor Switch
(LM/MS BP) Latch Monitor/Monitor Switch with Bypass
(DE) Delayed Egress – 15 sec (9100, 9300, 9500)
(PB) Pullman Bottom Latch – vertical rod only
(SNB) Sex Nuts – specify quantity
(WD) Wood Door Package (9100 only)
(ALD) Aluminum Door Brackets (9100)
(TX) Security Screws
(HC) Hurricane Code Rated (9300, 9400, and 9500)

Single Doors

Model	Door Material	Max. Door Opening	Door Ratings	Applications	
Concealed Vertical Rod **9100**	Wood/Steel	4' × 10'	Devices are panic listed only	Concealed (2) point latching	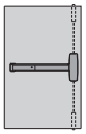
Concealed Vertical Rod **F9100**	Steel	4' × 10'	3 Hour		
	Wood	4' × 10'	1-1/2 Hour		
Concealed Vertical Rod (Less Bottom Rod) **9100 LB**	Wood/Steel	4' × 10'	Devices are panic listed only	Concealed (1) point latching	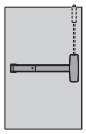
Concealed Vertical Rod (Less Bottom Rod) **F9100 LB**	Steel	4' × 10'	3 Hour		
	Wood	4' × 10'	1-1/2 Hour		
Rim **9300**	Wood/Steel	4' × 8'	Devices are panic listed only	Surface applied (1) point latching	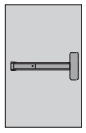
Rim **F9300**	Steel	4' × 8'	3 Hour		
	Wood	4' × 8'	1-1/2 Hour		
Surface Vertical Rod **9400**	Wood/Steel	4' × 10'	Devices are panic listed only	Surface applied (2) point latching	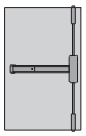
Surface Vertical Rod **F9400**	Steel	4' × 10'	3 Hour		
	Wood	4' × 10'	1-1/2 Hour		
Surface Vertical Rod (Less Bottom Rod) **9400 LB**	Wood/Steel	4' × 10'	Devices are panic listed only	Surface applied (1) point latching	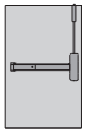
Surface Vertical Rod (Less Bottom Rod) **F9400 LB**	Steel	4' × 10'	3 Hour		
	Wood	4' × 10'	1-1/2 Hour		
Mortise **9500**	Wood/Steel	4' × 10'	Devices are panic listed only	Mortised (1) point latching	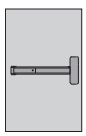
Mortise **F9500**	Steel	4' × 10'	3 Hour		
	Wood	4' × 8'	1-1/2 Hour		
	Wood	4' × 10'	*1/3 Hour		

* Designates minimum U.L. listing for wood doors over 8' in height. Listings for 90 minutes or greater may be applicable through other listing agencies dependent upon the wood door manufacturer's current listing. Contact wood door manufacturer for details.

Model	Door Material	Max. Door Opening	UL, UL Door Ratings	Applications	
Pair of Doors with Removable Mullion					
Rim × Rim **9300 × 9300**	Wood/Steel	8' × 8'	Devices are panic listed only	(2) independent active doors with removable mullion (1) point latching	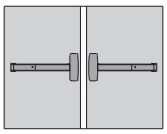
Rim × Rim **F9300 × F9300**	Steel	8' × 8'	3 Hour		
	Wood	8' × 8'	1-1/2 Hour		
Pair of Doors					
Concealed Vertical Rod **9100 × 9100**	Wood/Steel	8' × 10'	Devices are panic listed only	(2) independent doors with (2) point latching 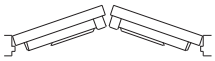 (swing same direction)	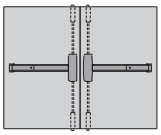
Concealed Vertical Rod **F9100 × F9100**	Steel	8' × 10'	1-1/2 Hour[2]		
	Wood	8' × 8'	1-1/2 Hour		
	Wood	8' × 10'	1-1/2 Hour		
Concealed Vertical Rod **9100 × 9100**	Wood/Steel	8' × 10'	Devices are panic listed only	(2) independent doors with (2) point latching 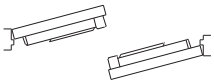 (swing opposite direction)	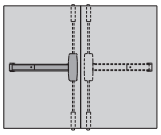
Concealed Vertical Rod **F9100 × F9100**	Steel	8' × 10'	3 Hour		
	Wood	8' × 8'	1-1/2 Hour		
	Wood	8' × 10'	1-1/2 Hour		
Concealed Vertical Rod (Less Bottom Rod) **9100 LB × 9100 LB**	Wood/Steel	8' × 10'	Devices are panic listed only	(2) independent doors with (1) point latching 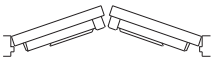 (swing same direction)	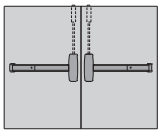
Concealed Vertical Rod (Less Bottom Rod) **F9100 LB × F9100 LB**	Steel	8' × 10'	1-1/2 Hour[1,2]		
	Wood	8' × 10'	1-1/2 Hour[1]		
Concealed Vertical Rod (Less Bottom Rod) **9100 LB × 9100 LB**	Wood/Steel	8' × 10'	Devices are panic listed only	(2) independent doors with (1) point latching 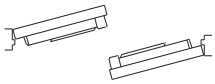 (swing opposite direction)	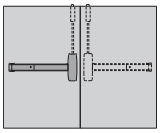
Concealed Vertical Rod (Less Bottom Rod) **F9100 LB × F9100 LB**	Steel	8' × 10'	3 Hour[1]		
	Wood	8' × 10'	1-1/2 Hour[1]		
Surface Vertical Rod **9400 × 9400**	Wood/Steel	8' × 10'	Devices are panic listed only	(2) independent doors with (2) point latching 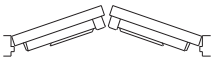 (swing same direction)	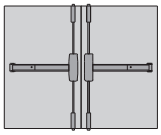
Surface Vertical Rod **F9400 × F9400**	Steel	8' × 10'	1-1/2 Hour[2]		
	Wood	8' × 8'	1-1/2 Hour		
	Wood	8' × 10'	1-1/2 Hour		

Notes:1. Fire rated pairs using **Less Bottom Rod** devices require the supplied door popper. With the absence of bottom rods, the popper holds the bottoms of the doors together in the event of fire.

2. Pairs of doors swinging in the same direction cannot use two vertical rod exit devices with an overlapping astragal as pairs of doors rated greater than 1-1/2 hours require a steel overlapping astragal. Currently, no door manufacturers offer over 90 minutes with doors swinging in the same direction.

Pair of Doors (continued)

Model	Door Material	Max. Door Opening	Door Ratings	Applications	
Surface Vertical Rod **9400 × 9400**	Wood/Steel	8' × 10'	Devices are panic listed only	(2) independent doors with (2) point latching 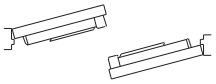 (swing opposite direction)	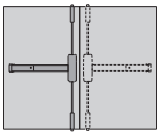
Surface Vertical Rod **F9400 × F9400**	Steel	8' × 10'	3 Hour		
	Wood	8' × 8'	1-1/2 Hour		
	Wood	8' × 10'	1-1/2 Hour		
Surface Vertical Rod (Less Bottom Rod) **9400 LB × 9400 LB**	Wood/Steel	8' × 10'	Devices are panic listed only	(2) independent doors with (1) point latching 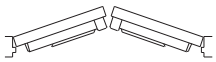 (swing same direction)	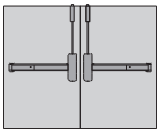
Surface Vertical Rod (Less Bottom Rod) **F9400 LB × F9400 LB**	Steel	8' × 10'	1-1/2 Hour[1,2]		
	Wood	8' × 10'	1-1/2 Hour[1]		
Surface Vertical Rod (Less Bottom Rod) **9400 LB × 9400 LB**	Wood/Steel	8' × 10'	Devices are panic listed only	(2) independent doors with (1) point latching 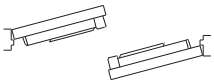 (swing opposite direction)	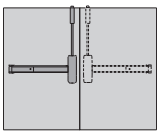
Surface Vertical Rod (Less Bottom Rod) **F9400 LB × F9400 LB**	Steel	8' × 10'	3 Hour[1]		
	Wood	8' × 10'	1-1/2 Hour[1]		
Rim × Surface Vertical Rod **9300 × 9400**	Wood/Steel	8' × 8'	Devices are panic listed only	(2) independent doors with (1) and (2) point latching 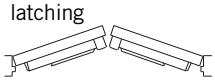 (swing same direction)	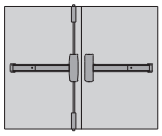
Rim × Concealed Vertical Rod **9300 × 9100**	Wood/Steel	8' × 8'	Devices are panic listed only	(2) independent doors with (1) and (2) point latching 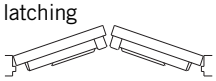 (swing same direction)	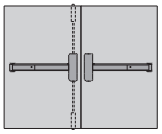
Mortise × Surface Vertical Rod **9500 × 9400**	Wood/Steel	8' × 10'	Devices are panic listed only	(2) independent doors with (1) and (2) point latching 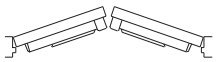 (swing same direction)	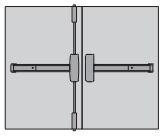
Mortise × Surface Vertical Rod **F9500 × F9400**	Steel	8' × 10'	3 Hour		
	Wood	8' × 8'	1-1/2 Hour		
	Wood	8' × 10'	1-1/2Hour		
Mortise × Concealed Vertical Rod **9500 × 9100**	Wood/Steel	8' × 10'	Devices are panic listed only	(2) independent doors with (1) and (2) point latching 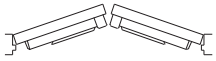 (swing same direction)	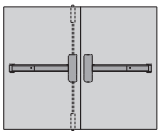
Mortise × Concealed Vertical Rod **F9500 × F9100**	Steel	8' × 10'	3 Hour		
	Wood	8' × 8'	1-1/2 Hour		
	Wood	8' × 10'	1-1/2Hour		

9100/F9100 Concealed Vertical Rod Exit Devices

The 9100 Concealed Vertical Rod and the F9100 Series Concealed Vertical Rod Fire Exit Devices are excellent choices where barrier-free codes, aesthetics, or the potential for vandalism require concealment of the vertical rod. They are panic and fire-listed (three-hour steel fire door applications) and feature a simplified adjustment mechanism that provides ease of installation and reduced service requirements.

Model Number	Function	Operation	Trim Model Numbers
9100 F9100	01	Exit Only (no trim)	
9100 F9100	DT	Dummy Trim	VODTCV 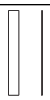 NPTDTCV YODT
9100	02	Entrance by trim when actuating bar is locked down.	V102CV V302CV PTT02CV PRT02CV
9100 F9100	03	Entrance by trim when latch bolts are retracted by key. Key removable only when locked.	VO03CV V103CV V303CV NPT03CV PTT03CV PRT03CV YO03
CD9100	04	Entrance by trim when latch bolts are retracted by key or set in a retracted position by key.	VO03CV V103CV V303CV NPT03CV PTT03CV PRT03CV YO03
9100 F9100	05	Entrance by thumbpiece. Key locks or unlocks thumbpiece.	HTT05CV HRT05CV
9100 F9100	06	Entrance by thumbpiece only when released by key. Key removable only when locked.	HTT06CV HRT06CV
9100 F9100	08	Entrance by knob or lever. Key locks or unlocks knob or lever.	YK08 YR08 YT08 YC08 YG08
9100 F9100	09	Entrance by knob or lever only when released by key. Key removable only when locked.	YK09 YR09 YT09 YC09 YG09
9100	22	Entrance by thumbpiece and pull or pull only when actuating bar is locked down.	HTT22CV HRT22CV
9100 F9100	23	Entrance by knob or lever (no cylinder). Knob or lever always active.	YK23 YR23 YT23 YC23 YG23

YK02R	YR02R YT02R YC02R YG02R			
YK03R	YR03R YT03R YC03R YG03R	K03 K03IC	R03 R03IC C03 G03 C03IC G03IC	
YK03R	YR03R YT03R YC03R YG03R	K03 K03IC	R03 R03IC C03 G03 C03IC G03IC	

YR08C YT08C YC08C YG08C	K08 K08IC	R08 R08IC C08 G08 C08IC G08IC	
	YR09C YT09C YC09C YG09C		

K23	R23 C23 G23	

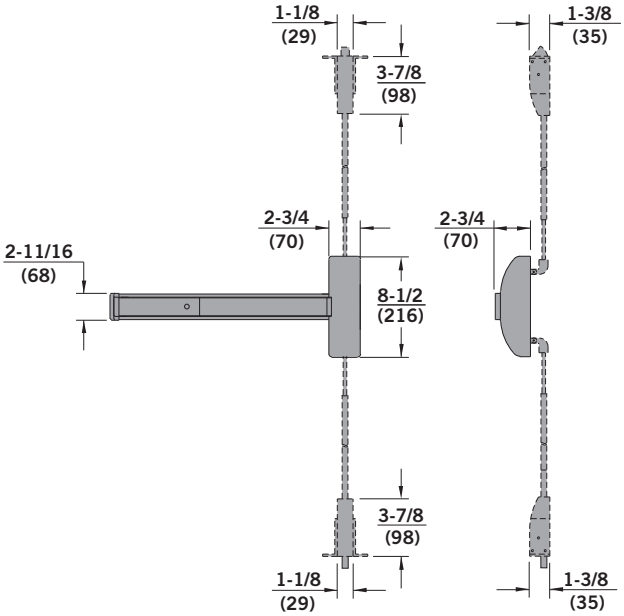

Standard Strikes

No. 418 - Top Strike 9100/F9100, 9100LB/F9100LB

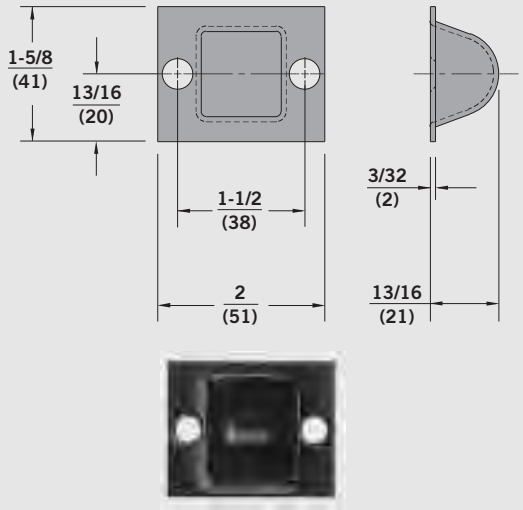

No. 439 - Bottom Strike 9100/F9100

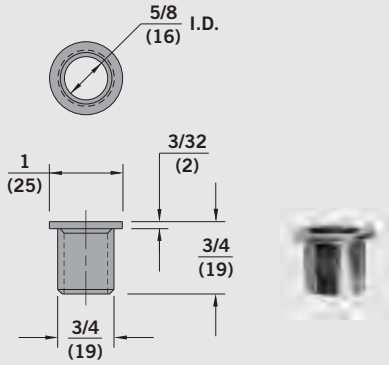

Optional Strikes

No. 419 - Top Strike for use with wood frames

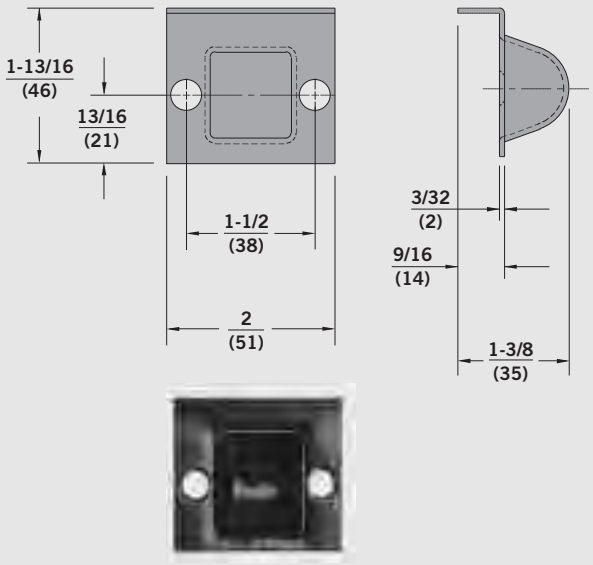

No. 431 - Recessed Bottom Strike for use with optional pullman bottom latch bolt

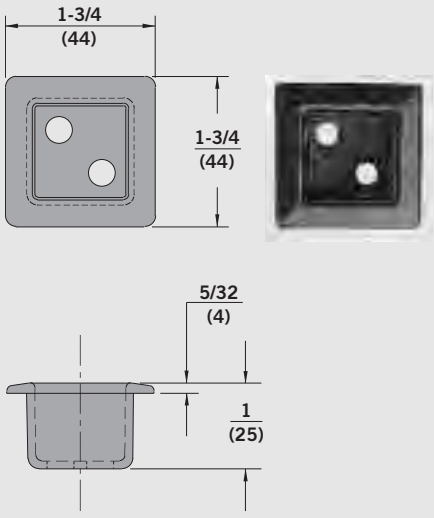

Optional Strikes

No. 340 - Flat Bottom Strike; Optional for use with standard bottom slidebolt

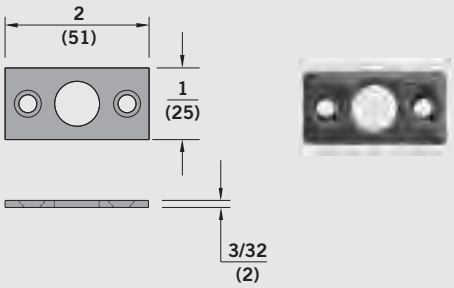

Minimum Stile and Vertical Reference

Pair Concealed Vertical Rod

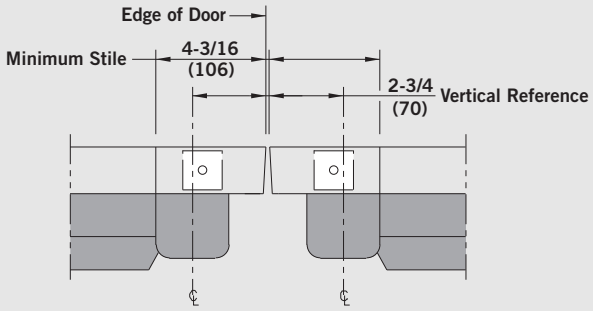

Concealed Vertical Rod × Mortise

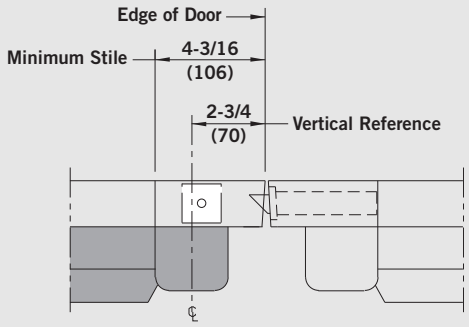

9300/F9300 Rim Exit Devices

The 9300 and F9300 present a simple, heavy-duty, easily installed solution where high quality panic and fire-listed hardware is needed. The patented exit devices in the 9300 and F9300 Series are available in a full range of finishes and trim options. The F9300 Series devices carry an "A" label for three-hour steel fire door applications.

Model Number	Function	Operation	Trim Model Numbers
9300 F9300	01	Exit Only (no trim)	
9300 F9300	DT	Dummy Trim	VODT NPTDT YODT
9300	02	Entrance by trim when actuating bar is locked down.	V102 V302 PTT02 PRT02
9300 F9300	03	Entrance by trim when latch bolt is retracted by key. Key removable only when locked.	VO03 V103 V303 NPT03 PTT03 PRT03 YO03
CD9300	04	Entrance by trim when latch bolt is retracted by key or set in a retracted position by key.	VO03 V103 V303 NPT03 PTT03 PRT03 YO03
9300 F9300	05	Entrance by thumbpiece. Key locks or unlocks thumbpiece.	HTT05 HRT05
9300 F9300	06	Entrance by thumbpiece only when released by key. Key removable only when locked.	HTT06 HRT06
9300 F9300	08	Entrance by knob or lever. Key locks or unlocks knob or lever.	YK08 YR08 YT08 YC08 YG08
F9300	08x08	Entrance by lever. Outside or inside key locks or unlocks lever.	YR08x08
9300 F9300	09	Entrance by knob or lever only when released by key. Key removable only when locked.	YK09 YR09 YT09 YC09 YG09
9300	22	Entrance by thumbpiece and pull or pull only when actuating bar is locked down.	HTT22 HRT22
9300 F9300	23	Entrance by knob or lever (no cylinder). Knob or lever always active.	YK23 YR23 YT23 YC23 YG23

YK02R

YR02R
YT02R
YC02R
YG02R

YK03R

YR03R
YT03R
YC03R
YG03R

K03
K03IC

POF03HDA

R03
R03IC
C03 G03
C03IC G03IC

YK03R

YR03R
YT03R
YC03R
YG03R

K03
K03IC

POF03HDA

R03
R03IC
C03 G03
C03IC G03IC

YR08C
YT08C
YC08C
YG08C

K08
K08IC

R08
R08IC
C08 G08
C08IC G08IC

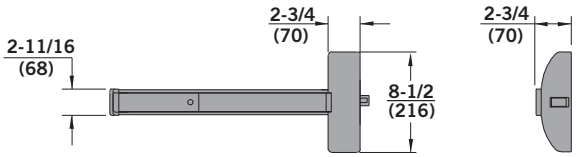

YR09C
YT09C
YC09C
YG09C

K23

R23
C23
G23

Standard Strike

No. 463 - Standard Strike with 9300 and F9300

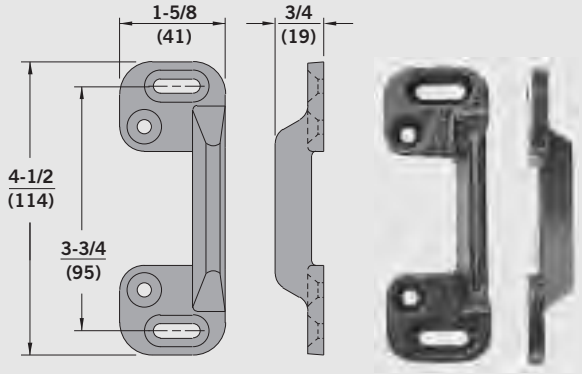

Optional Strike

No. 430 - Box Strike with 9300

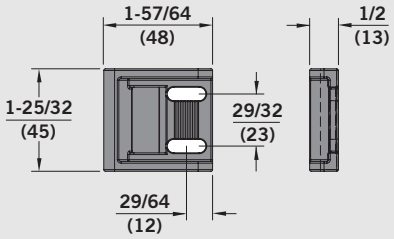

Optional Strikes

No. 486 - Roller Strike for use with 9300

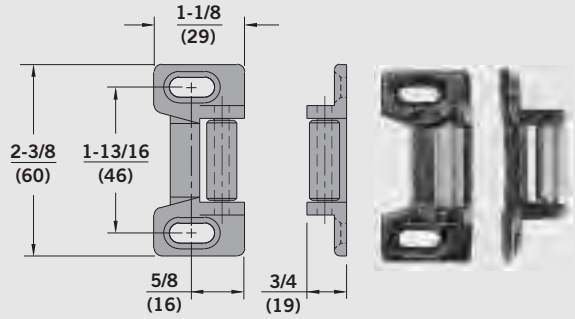

No. 320 - Overlap Strike for use with 9300

Not Fire Rated

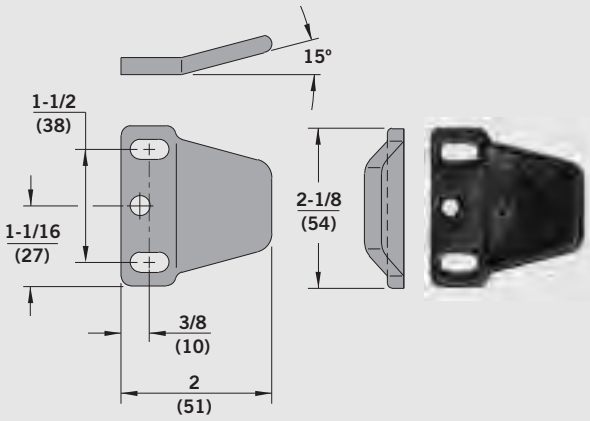

Minimum Stile and Vertical Reference

Single Door

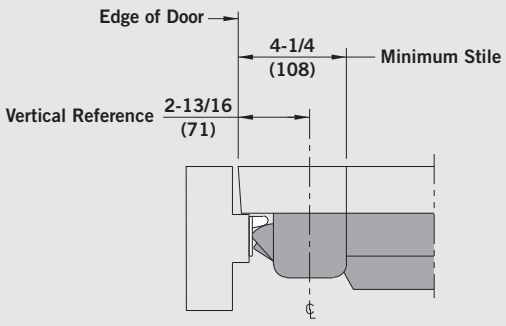

Pair Doors with Mullion

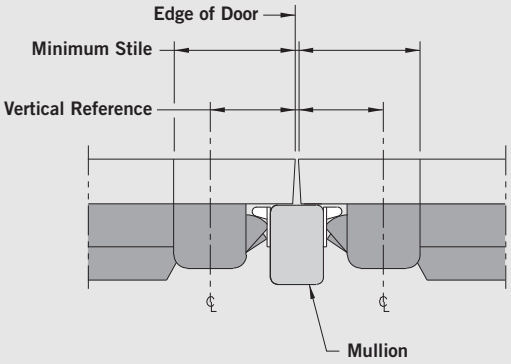

Mullion	Strike	Vert. Ref.	Min. Stile
1310	All	2-3/4" (70)	4-3/16" (106)
1330	All	2-15/16" (75)	4-3/8" (111)
F1300 F1340KR	All	3-1/4" (83)	4-11/16" (119)

Rim and Vertical Rod
Pair Doors with No Mullion

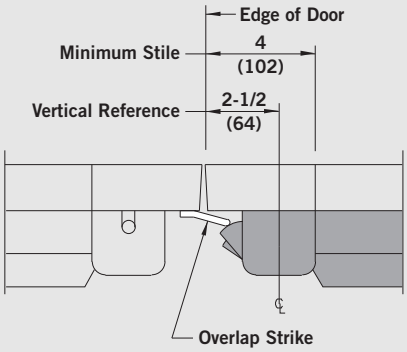

9400/F9400 Surface Vertical Rod Exit Devices

The 9400 and F9400 provide heavy-duty, secure, two-point latching at the top and bottom of the opening. Both the 9400 and F9400 Series feature a patented latch design for reliable, secure operation. The F9400 devices are U.L.-listed for three-hour steel fire door applications.

Model Number	Function	Operation	Trim Model Numbers
9400 F9400	01	Exit Only (no trim)	
9400 F9400	DT	Dummy Trim	VODT NPTDT YODT
9400	02	Entrance by trim when actuating bar is locked down.	V102 V302 PTT02 PRT02
9400 F9400	03	Entrance by trim when latch bolts are retracted by key. Key removable only when locked.	VO03 V103 V303 NPT03 PTT03 PRT03 YO03
CD9400	04	Entrance by trim when latch bolt is retracted by key or set in a retracted position by key.	VO03 V103 V303 NPT03 PTT03 PRT03 YO03
9400 F9400	05	Entrance by thumbpiece. Key locks or unlocks thumbpiece.	HTT05 HRT05
9400 F9400	06	Entrance by thumbpiece only when released by key. Key removable only when locked.	HTT06 HRT06
9400 F9400	08	Entrance by knob or lever. Key locks or unlocks knob or lever.	YK08
9400 F9400	09	Entrance by knob or lever only when released by key. Key removable only when locked.	YK09
9400	22	Entrance by thumbpiece and pull or pull only when actuating bar is locked down.	HTT22 HRT22
9400 F9400	23	Entrance by knob or lever (no cylinder). Knob or lever always active.	YK23

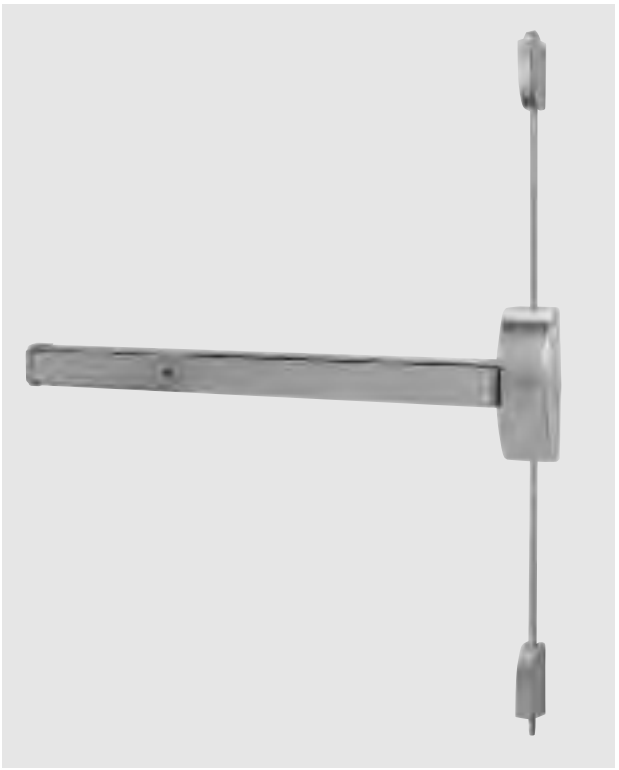

YK02R	YR02R YT02R YC02R YG02R				
YK03R	YR03R YT03R YC03R YG03R	K03 K03IC	R03 R03IC C03 C03IC	G03 G03IC	
YK03R	YR03R YT03R YC03R YG03R	K03 K03IC	R03 R03IC C03 C03IC	G03 G03IC	

YR08 YT08 YC08 YG08	YR08C YT08C YC08C YG08C	K08 K08IC	R08 R08IC C08 C08IC	G08 G08IC	
YR09 YT09 YC09 YG09	YR09C YT09C YC09C YG09C				

YR23 YT23 YC23 YG23	K23	R23 C23 G23			

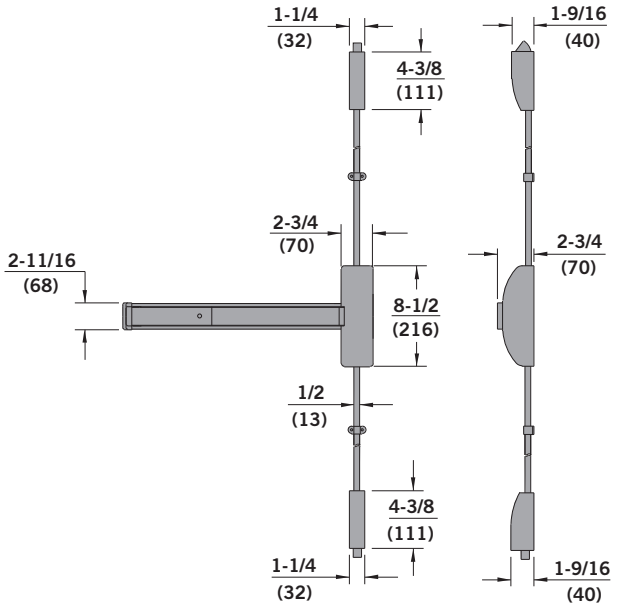

Standard Strikes

No. 426 - Top Strike 9400/F9400, 9400LB/F9400LB

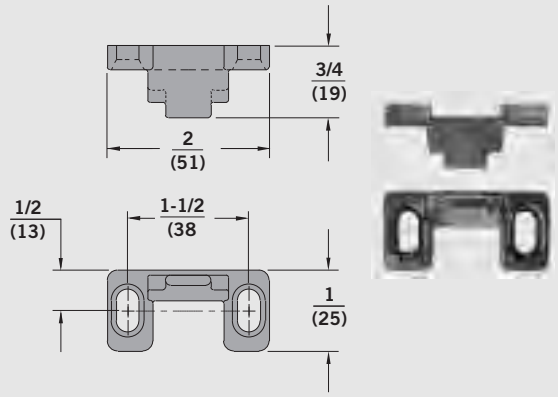

No. 439 - Bottom Strike 9400/F9400

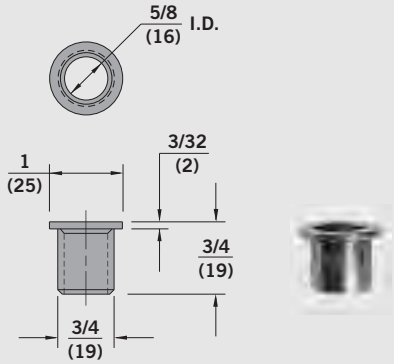

Optional Strikes

No. 426A - Top strike with angle bracket for use with flush door and frame

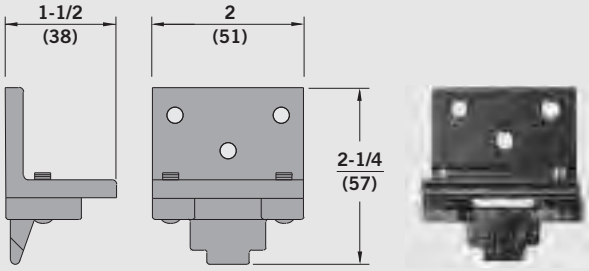

No. 340 - Flat bottom strike for use with standard bottom slidebolt

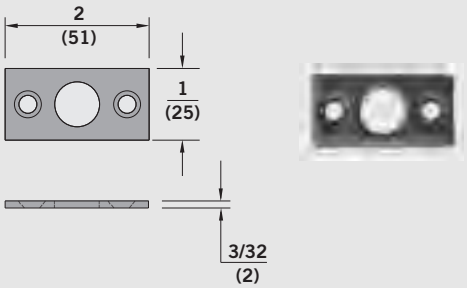

Optional Strikes

No. 416V - Surface mount bottom strike for use with optional pullman bottom latch

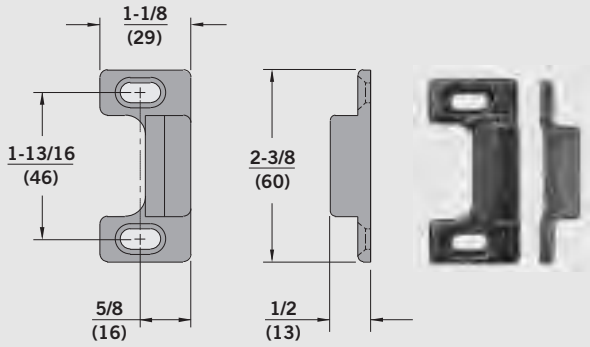

No. 431 - Recessed bottom strike for use with optional pullman bottom latch bolt

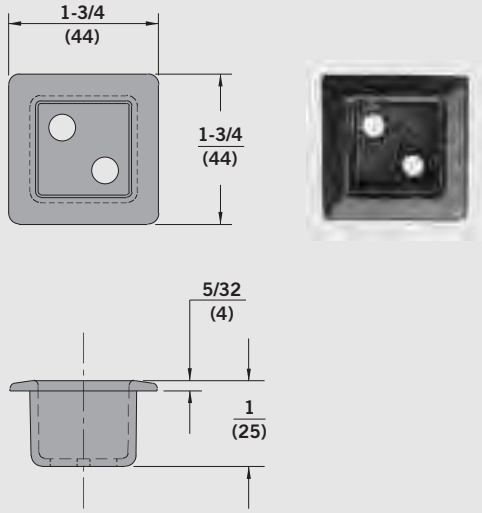

Minimum Stile and Vertical Reference

Vertical Rod × Mortise

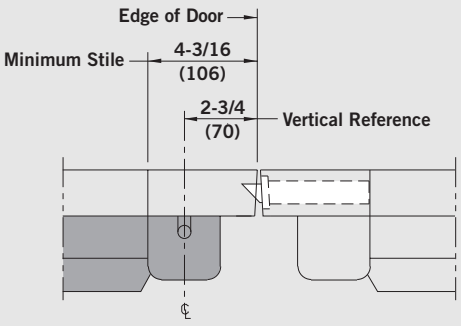

Pair Vertical Rod

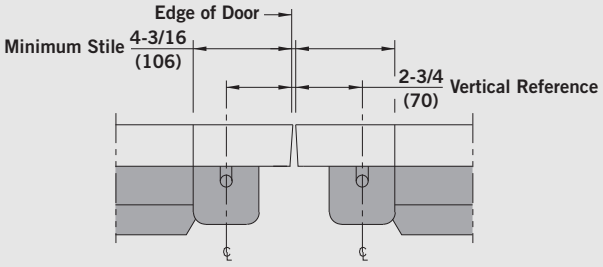

9500/F9500 Mortise Lock Exit Devices

The 9500 and F9500 include a heavy-duty, high quality deadlocking mortise lock that provides a high level of security and exceptional durability. The F9500 Series devices are U.L.-listed for three-hour steel fire door applications.

Model Number	Function	Operation	Trim Model Numbers
9500 F9500	01[1]	Exit Only (no trim)	
9500 F9500	DT[1]	Dummy Trim	VODT NPTDT YODT
9500	02[1]	Entrance by trim when actuating bar is locked.	V102M V302M PTT02M PRT02M
9500 F9500	03[2]	Entrance by trim when latch bolt is retracted by key. Key removable only when locked.	VO03M V103M V303M NPT03M PTT03M PRT03M YO03M
CD9500	04[2]	Entrance by trim when latch bolt is retracted by key or set in a retracted position by key.	VO03M V103M V303M NPT03M PTT03M PRT03M YO03M
9500 F9500	05[3]	Entrance by thumbpiece. Key locks or unlocks thumbpiece.	HTT05M HRT05M (specify hand)
9500 F9500	08[1]	Entrance by knob or lever. Key locks or unlocks knob or lever.	YK08M
9500	22[3]	Entrance by thumbpiece and pull.	HTT22M HRT22M (specify hand)
9500 F9500	23[1]	Entrance by knob or lever (no cylinder). Knob or lever always active.	

Note: When ordering a 9500 device without trim, specify the device function so the correct mortise lock can be supplied.

1. Uses 08 function lock case
2. Uses 03 function lock case
3. Uses 05 function lock case

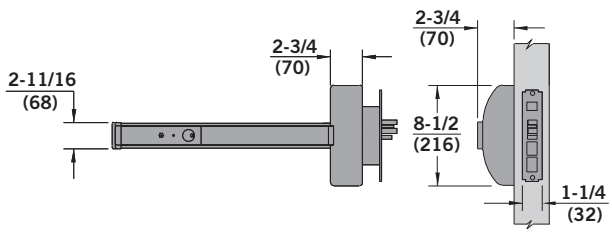

YK02R	YR02R YT02R YC02R YG02R
YK03MR	YR03MR YT03MR YC03MR YG03MR
YK03MR	YR03MR YT03MR YC03MR YG03MR
YR08M YT08M YC08M YG08M	YR08MC YT08MC YC08MC YG08MC
YK23M	YR23M YT23M YC23M YG23M

Standard Strike

No. 465 - Standard strike with 9500/F9500

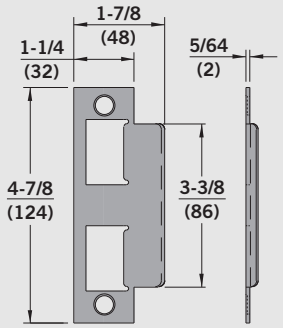

Optional Strike

No. 565 - Open back strike. Hand of strike is the same as the device. Specify hand (RHR shown).

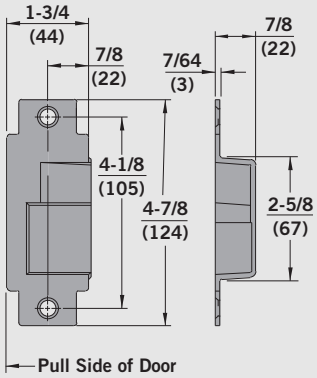

Mortise Lock

(Handed)

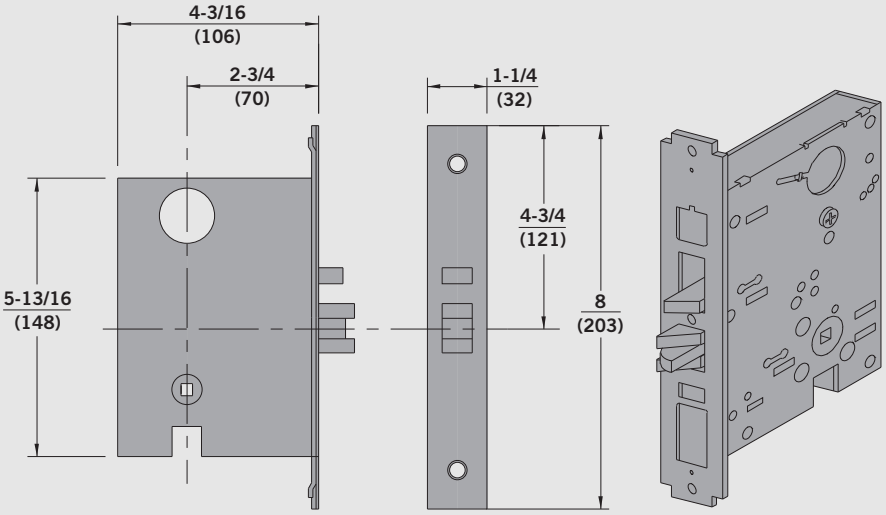

Available Functions – 03, 05, 08

Vertical Reference

Single Doors

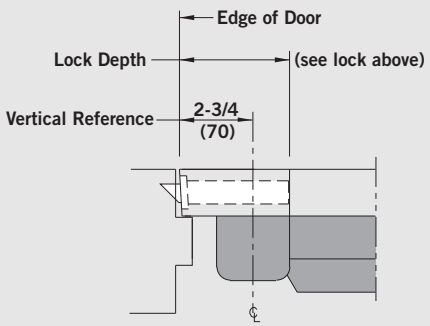

Mortise and Vertical Rod Pair Doors

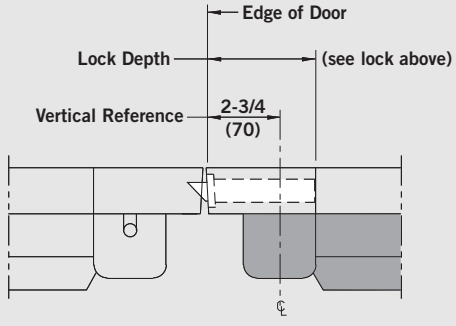

Trim

	—	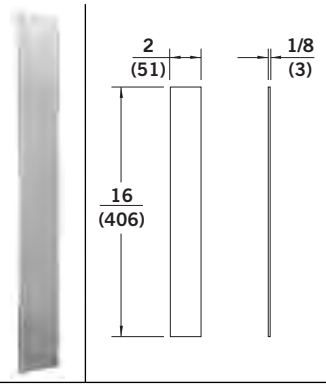	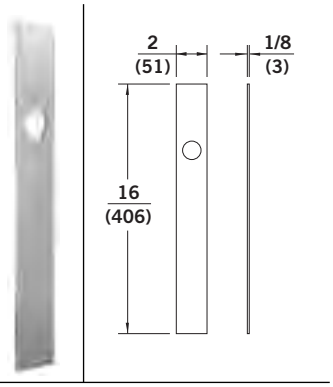
Trim Descriptions	Exit Only	Narrow Flat Plate Dummy Trim	Narrow Flat Plate with Cylinder Hole
Trim Designations	No Trim	VODT, VODTCV	V003, V003CV
Handing	—	—	—
Function	01	DT	03 or 04 (with CD device)
DORMA Cylinder (included)	—	—	80R20SC – Rim
DORMA Cylinder (ordered separately)	—	—	86R20BA – 6-pin IC 87R20BA – 7-pin IC

Trim

	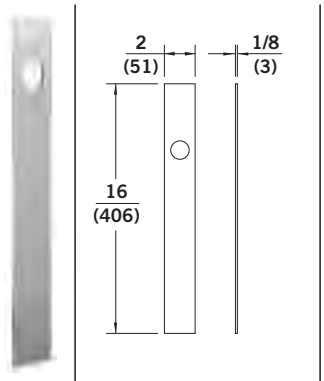	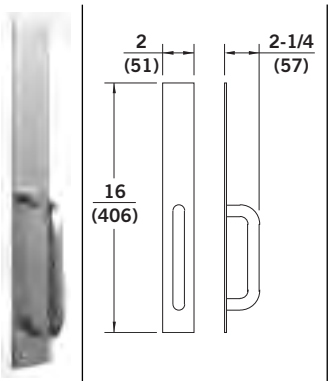	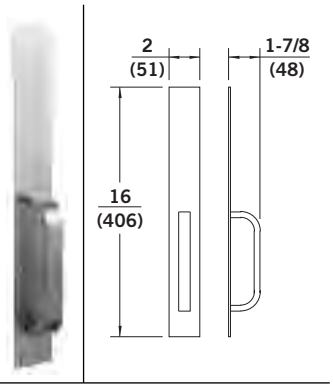
Trim Descriptions	Narrow Flat Plate with Cylinder Hole (mortise)	Narrow Flat Plate Tubular Pull	Narrow Flat Plate Rectangular Pull
Trim Designations	V003M	V102, V102CV	V302, V302CV
Handing	—	—	—
Function	03 or 04 (with CD device)	02	02
DORMA Cylinder (included)	90A10SC118 – Mortise	—	—
DORMA Cylinder (ordered separately)	96B10BA138 – 6-pin IC 97B10BA138 – 7-pin IC	—	—

Trim

	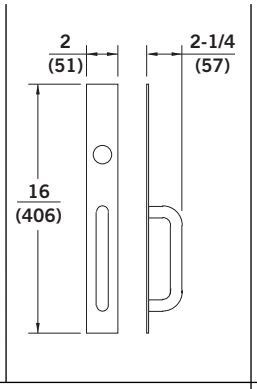	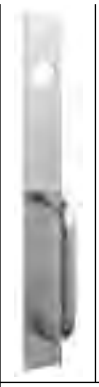 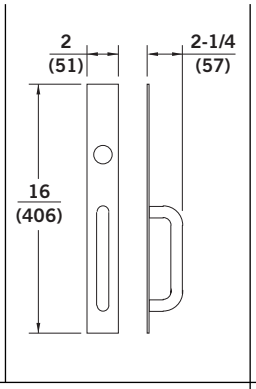	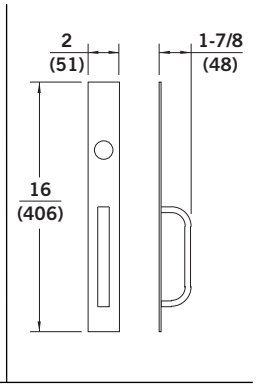
Trim Descriptions	Narrow Flat Plate Tubular Pull with Cylinder Hole	Narrow Flat Plate Tubular Pull with Cylinder Hole (mortise)	Narrow Flat Plate Rectangular Pull with Cylinder Hole
Trim Designations	V103, V103CV	V103M	V303, V303CV
Handing	—	—	—
Function	03 or 04 (with CD device)	03 or 04 (with CD device)	03 or 04 (with CD device)
DORMA Cylinder (included)	80R20SC – Rim	90A10SC118 – Mortise	80R20SC – Rim
DORMA Cylinder (ordered separately)	86R20BA – 6-pin IC 87R20BA – 7-pin IC	96B10BA138 – 6-pin IC 97B10BA138 – 7-pin IC	86R20BA – 6-pin IC 87R20BA – 7-pin IC

Trim

	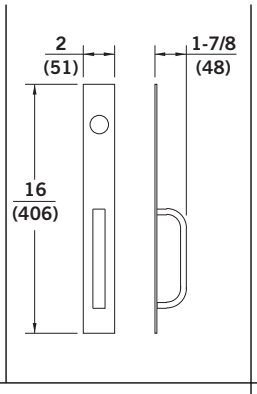	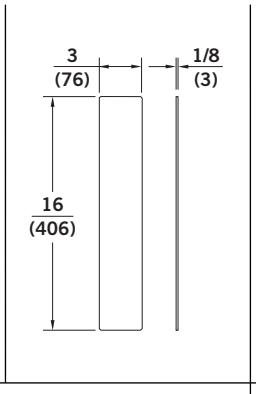	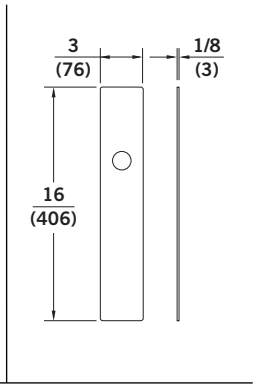
Trim Descriptions	Narrow Flat Plate Rectangular Pull with Cylinder Hole (mortise)	Wide Flat Plate Dummy Trim	Wide Flat Plate with Cylinder Hole
Trim Designations	V303M	NPTDT, NPTDTCV	NPT03, NPT03CV
Handing	—	—	—
Function	03 or 04 (with CD device)	DT	03 or 04 (with CD device)
DORMA Cylinder (included)	90A10SC118 – Mortise	—	80R20SC – Rim
DORMA Cylinder (ordered separately)	96B10BA138 – 6-pin IC 97B10BA138 – 7-pin IC	—	86R20BA – 6-pin IC 87R20BA – 7-pin IC

Trim

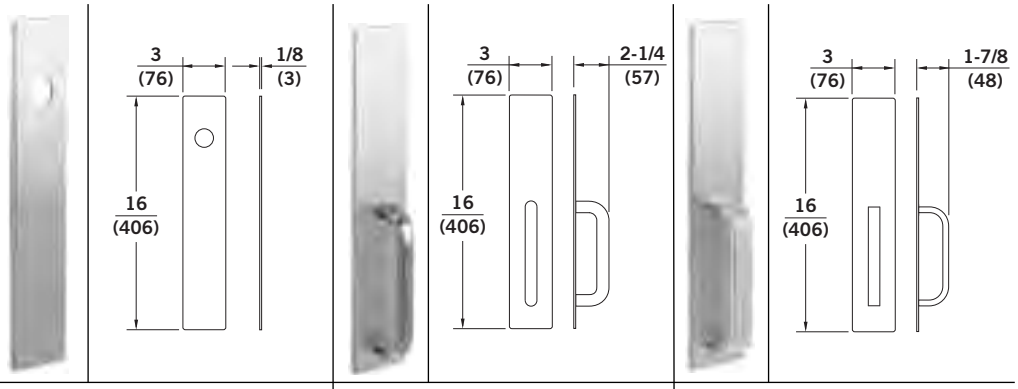

Trim Descriptions	Wide Flat Plate with Cylinder Hole (mortise)	Wide Flat Plate Tubular Pull	Wide Flat Plate Rectangular Pull
Trim Designations	NPT03M	PTT02, PTT02CV	PRT02, PRT02CV
Handing	—	—	—
Function	03 or 04 (with CD device)	02	02
DORMA Cylinder (included)	90A10DC118 – Mortise	—	—
DORMA Cylinder (ordered separately)	96B10BA138 – 6-pin IC 97B10BA138 – 7-pin IC	—	—

Trim

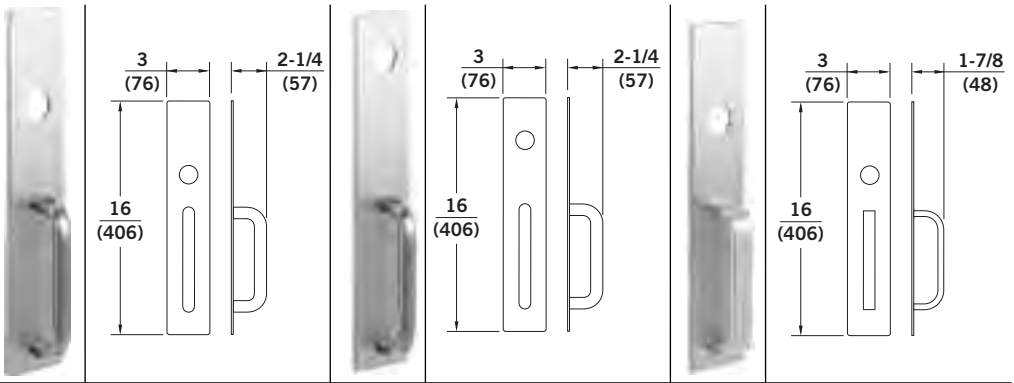

Trim Descriptions	Wide Flat Plate Tubular Pull with Cylinder Hole	Wide Flat Plate Tubular Pull with Cylinder Hole (mortise)	Wide Flat Plate Rectangular Pull with Cylinder Hole
Trim Designations	PTT03, PTT03CV	PTT03M	PRT03, PRT03CV
Handing	—	—	—
Function	03 or 04 (with CD device)	03 or 04 (with CD device)	03 or 04 (with CD device)
DORMA Cylinder (included)	80R20SC – Rim	90A10SC118 – Mortise	80R20SC – Rim
DORMA Cylinder (ordered separately)	86R20BA – 6-pin IC 87R20BA – 7-pin IC	96B10BA138 – 6-pin IC 97B10BA138 – 7-pin IC	86R20BA – 6-pin IC 87R20BA – 7-pin IC

Trim

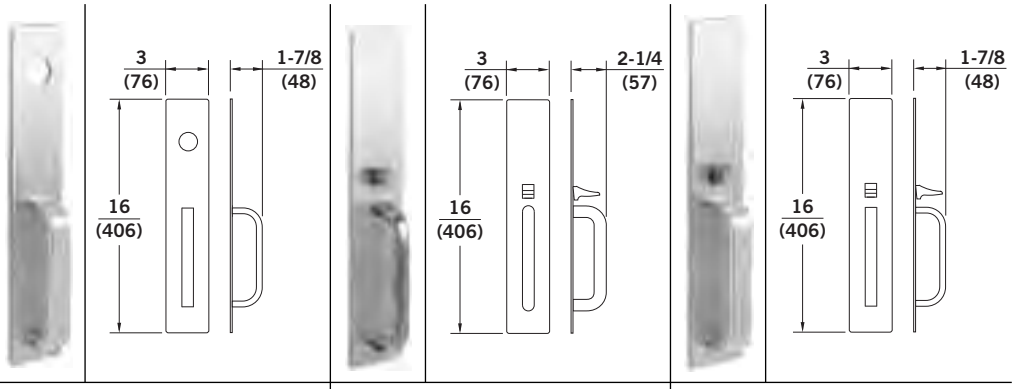

Trim Descriptions	Wide Flat Plate Rectangular Pull with Cylinder Hole (mortise)	Wide Flat Plate Tubular Pull with Thumbpiece	Wide Flat Plate Rectangular Pull with Thumbpiece
Trim Designations	PRT03M	HTT22, HTT22CV, HTT22M	HRT22, HRT22CV, HRT22M
Handing	—	—	—
Function	03 or 04 (with CD device)	22	22
DORMA Cylinder (included)	90A10SC118 – Mortise	—	—
DORMA Cylinder (ordered separately)	96B10BA138 – 6-pin IC 97B10BA138 – 7-pin IC	—	—

Trim

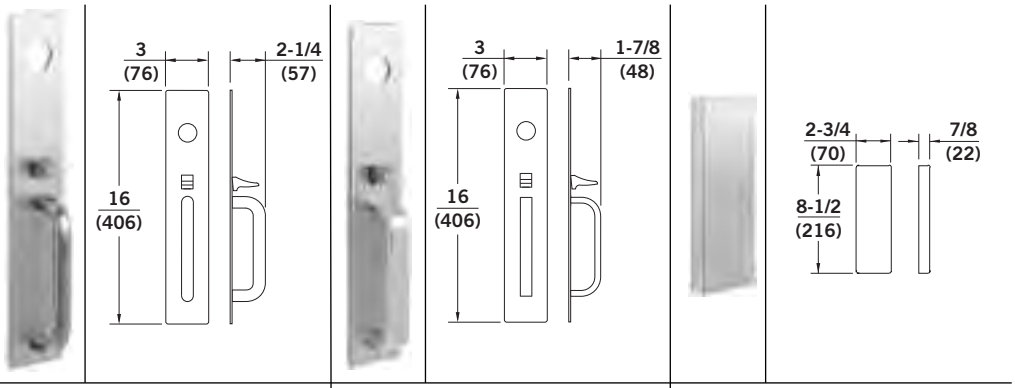

Trim Descriptions	Wide Flat Plate Tubular Pull with Thumbpiece and Cylinder Hole	Wide Flat Plate Rectangular Pull with Thumbpiece and Cylinder Hole	Raised Escutcheon Plate Dummy Trim
Trim Designations	HTT05, HTT05CV, HTT05M HTT06, HTT06CV	HRT05, HRT05CV, HRT05M HRT06, HRT06CV	YODT
Handing	—	—	—
Function	05 or 06 (HTT06, HTT06CV)	05 or 06 (HRT06, HRT06CV)	DT
DORMA Cylinder (included)	90A10SC118 – Mortise	90A10SC118 – Mortise	—
DORMA Cylinder (ordered separately)	96A10BA138 – 6-pin IC 97A10BA138 – 7-pin IC	96A10BA138 – 6-pin IC 97A10BA138 – 7-pin IC	—

Trim

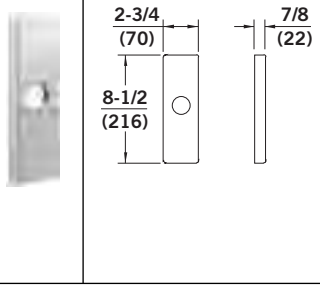

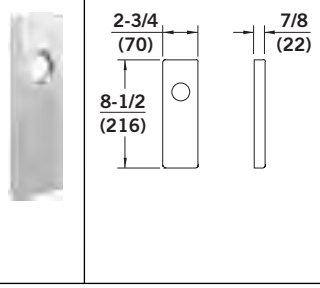

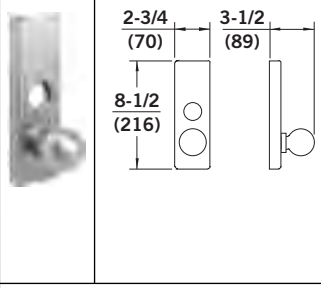

Trim Descriptions	Raised Escutcheon Plate with Cylinder Hole	Raised Escutcheon Plate with Cylinder Hole (mortise)	Raised Escutcheon Plate Knob with Cylinder Hole (rigid trim)
Trim Designations	YO03	YO03M	YK03R
Handing	—	—	—
Function	03 or 04 (with CD device)	03 or 04 (with CD device)	03 or 04 (with CD device)
DORMA Cylinder (included)	80R20SC – Rim	90X10SC112 – Mortise	80R20SC – Rim
DORMA Cylinder (ordered separately)	86R20BA – 6-pin IC 87R20BA – 7-pin IC	96D10BA134 – 6-pin IC 97D10BA134 – 7-pin IC	86R20BA – 6-pin IC 87R20BA – 7-pin IC

Trim

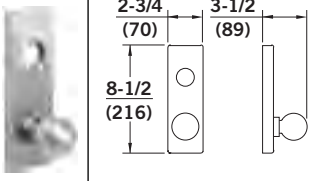

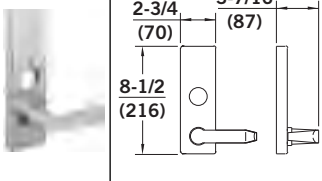

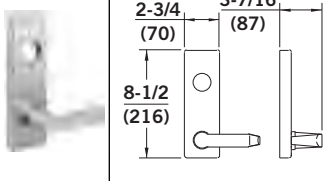

Trim Descriptions	Raised Escutcheon Plate Knob with Cylinder Hole (mortise × rigid trim)	Raised Escutcheon Plate Rectangular Lever with Cylinder Hole (rigid trim)	Raised Escutcheon Plate Rectangular Lever with Cylinder Hole (mortise × rigid trim)
Trim Designation	YK03MR	YR03R	YR03MR
Handing	—	—	—
Function	03 or 04 (with CD device)	03 or 04 (with CD device)	03 or 04 (with CD device)
DORMA Cylinder (included)	90X10SC112 – Mortise	80R20SC – Rim	90X10SC112 – Mortise
DORMA Cylinder (ordered separately)	96D10BA134 – 6-pin IC 97D10BA134 – 7-pin IC	86R20BA – 6-pin IC 87R20BA – 7-pin IC	96D10BA134 – 6-pin IC 97D10BA134 – 7-pin IC

Trim

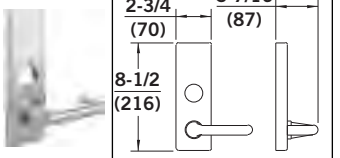

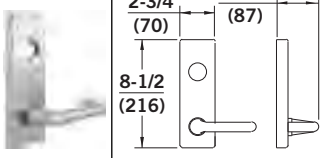

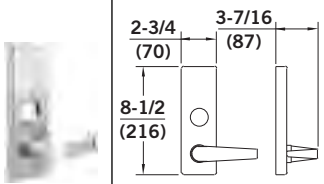

Trim Descriptions	Raised Escutcheon Plate Tubular Lever with Cylinder Hole (rigid trim)	Raised Escutcheon Plate Tubular Lever with Cylinder Hole (mortise × rigid trim)	Raised Escutcheon Plate Curved Lever with Cylinder Hole (rigid trim)
Trim Designation	YT03R	YT03MR	YC03R
Handing	—	—	—
Function	03 or 04 (with CD device)	03 or 04 (with CD device)	03 or 04 (with CD device)
DORMA Cylinder (included)	80R20SC – Rim	90X10SC112 – Mortise	80R20SC – Rim
DORMA Cylinder (ordered separately)	86R20BA – 6-pin IC 87R20BA – 7-pin IC	96D10BA134 – 6-pin IC 97D10BA134 – 7-pin IC	86R20BA – 6-pin IC 87R20BA – 7-pin IC

Trim

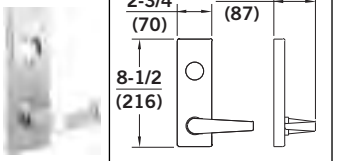

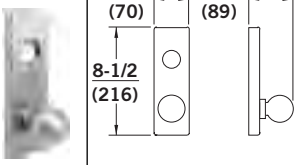

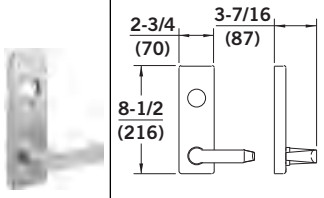

Trim Descriptions	Raised Escutcheon Plate Curved Lever with Cylinder Hole (mortise × rigid trim)	Raised Escutcheon Plate Knob with Cylinder Hole	Raised Escutcheon Plate Rectangular Lever with Cylinder Hole
Trim Designation	YC03MR	YK08M	YR08M, YR08MC
Handing	—	—	Specify Hand YR08MC
Function	03 or 04 (with CD device)	08	08
DORMA Cylinder (included)	90X10SC112 – Mortise	90X10SC112 – Mortise	90X10SC112 – Mortise
DORMA Cylinder (ordered separately)	96D10BA134 – 6-pin IC 97D10BA134 – 7-pin IC	96D10BA134 – 6-pin IC 97D10BA134 – 7-pin IC	96D10BA134 – 6-pin IC 97D10BA134 – 7-pin IC

Trim

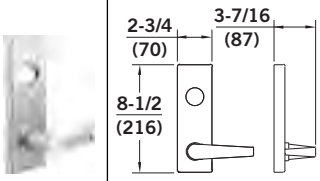

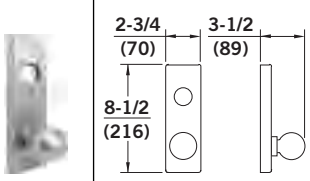

Trim Descriptions	Raised Escutcheon Plate Tubular Lever with Cylinder Hole	Raised Escutcheon Plate Curved Lever with Cylinder Hole	Raised Escutcheon Plate Knob with Cylinder Hole
Trim Designations	YT08M, YT08MC	YC08M, YC08MC	YK08, YK09
Handing	Specify Hand YT08MC	Specify Hand YC08MC	—
Function	08	08	08, 09
DORMA Cylinder (included)	90X10SC112 – Mortise	90X10SC112 – Mortise	90X10SC118 – Mortise
DORMA Cylinder (ordered separately)	96D10BA134 – 6-pin IC 97D10BA134 – 7-pin IC	96D10BA134 – 6-pin IC 97D10BA134 – 7-pin IC	96X10BA138 – 6-pin IC 97X10BA138 – 7-pin IC

Trim

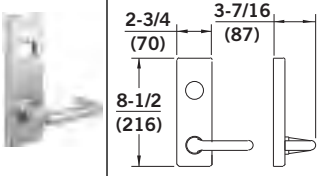

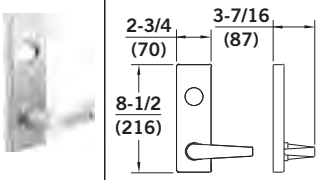

Trim Descriptions	Raised Escutcheon Plate Rectangular Lever with Cylinder Hole	Raised Escutcheon Plate Tubular Lever with Cylinder Hole	Raised Escutcheon Plate Curved Lever with Cylinder Hole
Trim Designations	YR08, YR08C, YR08x08*, YR09, YR09C	YT08, YT08C YT09, YT09C	YC08, YC08C YC09, YC09C
Handing	Specify Hand YR08C, YR08x08, YR09C	Specify Hand YT08C, YT09C	Specify Hand YC08C, YC09C
Function	08, 09	08, 09	08, 09
DORMA Cylinder (included)	90X10SC118 – Mortise	90X10SC118 – Mortise	90X10SC118 – Mortise
DORMA Cylinder (ordered separately)	96X10BA138 – 6-pin IC 97X10BA138 – 7-pin IC	96X10BA138 – 6-pin IC 97X10BA138 – 7-pin IC	96X10BA138 – 6-pin IC 97X10BA138 – 7-pin IC

***YR08x08** trim requires push-side rim cylinder (ordered separately).

DORMA Cylinder: 80R20SC – Rim
86R20BA – 6-pin IC
87R20BA – 7-pin IC

Trim

	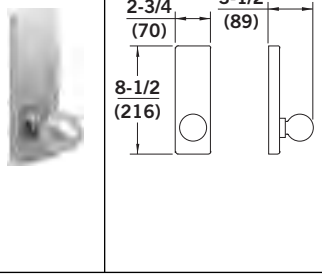	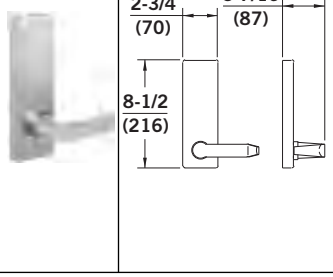	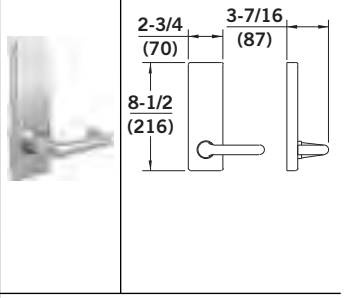
Trim Descriptions	Raised Escutcheon Plate Knob	Raised Escutcheon Plate Rectangular Lever	Raised Escutcheon Plate Tubular Lever
Trim Designations	YK02R, YK23, YK23M	YR02R, YR23, YR23M	YT02R, YT23, YT23M
Handing	—	—	—
Function	02 or 23	02 or 23	02 or 23
DORMA Cylinder (ordered separately)	—	—	—

Trim

	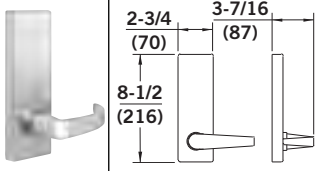	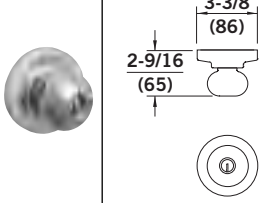	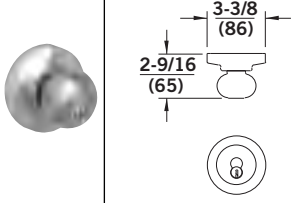
Trim Descriptions	Raised Escutcheon Plate Curved Lever	Key-in-Knob	Key-in-Knob Interchangeable Core
Trim Designations	YC02R, YC23, YC23M	K03, K08	K03IC, K08IC
Handing	—	Specify Hand	Specify Hand
Function	02 or 23	03 or 08	03 or 08
DORMA Cylinder (included)	—	Includes DORMA key-in-lever/ knob cylinder 7013SC KD	Accepts SFIC
DORMA Cylinder (ordered separately)	—	—	76BAxxx – 6-pin IC 77BAxxx – 7-pin IC

Trim

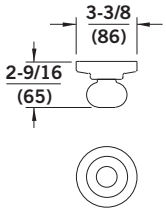

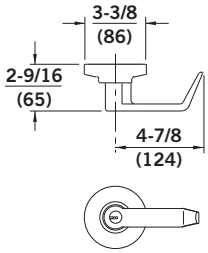

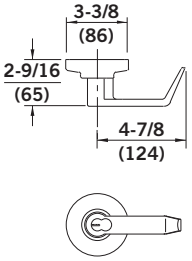

Trim Descriptions	Knob	Key-in-Rectangular Lever	Key-in-Rectangular Lever Interchangeable Core
Trim Designations	K23	R03, R08	R03IC, R08IC
Handing	—	Specify Hand	Specify Hand
Function	23	03 or 08	03 or 08
DORMA Cylinder (included)	—	Includes DORMA key-in-lever/ knob cylinder 7013SC KD	Accepts SFIC
DORMA Cylinder (ordered separately)	—	—	76BAxxx – 6-pin IC 77BAxxx – 7-pin IC

Trim

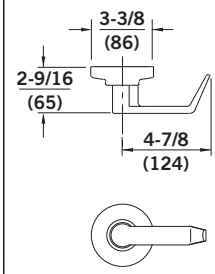

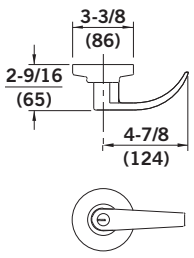

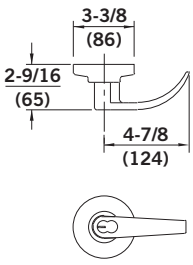

Trim Descriptions	Rectangular Lever	Key-in-Curved Lever	Key-in-Curved Lever interchangeable Core
Trim Designations	R23	C03, C08	C03IC, C08IC
Handing	Specify Hand	Specify Hand	Specify Hand
Function	23	03 or 08	03 or 08
DORMA Cylinder (included)	—	Includes DORMA key-in-lever/ knob cylinder 7013SC KD	Accepts SFIC
DORMA Cylinder (ordered separately)	—	—	76BAxxx – 6-pin IC 77BAxxx – 7-pin IC

Trim

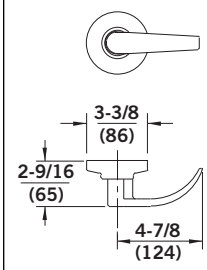

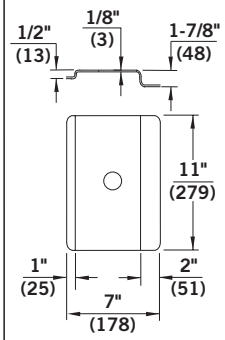

Trim Descriptions	Curved Lever	Heavy-Duty Offset Pull with Cylinder Hole
Trim Designations	C23	POF03HDA
Handing	Specify Hand	Specify Hand
Function	23	03
DORMA Cylinder (included)	—	80R20SC – Rim
DORMA Cylinder (ordered separately)	—	86R20BA – 6-pin IC 87R20BA – 7-pin IC

Key-in-Knob and Key-in-Lever trim are reversible in the field.

Note: All operating trim furnished free wheeling as standard, except mortise devices.

Trim Options

Clutch Lever Trim –
Although mandated to meet ADA requirements, lever handles are especially subject to vandalism and damage. The **clutch** option for lever trim includes an internal slip clutch mechanism which allows the lever handle to break away without damage or violating security when excessive force is applied. The lever can be lifted back to horizontal to reset it.

An internal dead stop limits the break away to 55° of lever handle rotation. Specify suffix **C** to trim designation. Available only on YC, YG, YR, or YT trim. Specify hand.

Rigid Trim –
Rigid lever and knob option is available on YC, YG, YK, YR, and YT trim. Specify suffix **R** to trim designation.

Electrified Trim –
Electrified **Y** style trim with integral locking/unlocking option. Trim can be used with models 9100/F9100, 9300/F9300 and 9400/F9400. Available as fail-secure or fail-safe. Specify suffix **LFSC** (fail-secure) or **LFSF** (fail-safe) following trim designation. Available for the 09 function only. An integral microswitch is available as an option to monitor the status of the trim. **Electrified trim options must use an ES100 power supply to prevent permanent damage to the electronics. Two devices can be powered by an ES100 device.**

Electrified option also available with the 9500/F9500 mortise device which utilizes an electrified mortise lock design. Specify suffix following exit device designation, i.e. 9500LFSF. Available for all styles of trim with an 08 function. This option is not field-interchangeable between fail-secure and fail-safe. **Electrified mortise locks must use a PS531RF power supply to prevent permanent damage to the electronics. Two devices can be powered by a PS531RF device,**

Mortise and Rim Cylinder Specifications

NOTES:

1. Reference specific trim on pages 22–31 for DORMA rim and mortise cylinder requirements.
2. Cylinder illustrations are for mortise cylinder requirements.

Mortise Cylinder

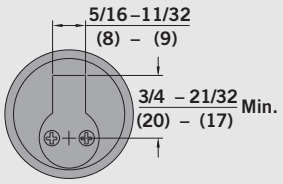

DORMA CAM #10

Key-in-Lever/Knob Cylinder Specifications

Trim K03, K08, R03, R08, C03, C08, G03, and G08 use a key-in-lever/knob cylinder.

DORMA 7013SC KD key-in-lever/knob cylinder included standard with trim.

Interchangeable Core Cylinder Specifications

Trim K03IC, K08IC, R03IC, R08IC, C03IC, C08IC, G03IC, and G08IC accepts a small format interchangeable core cylinder.

Order DORMA cylinder:
76BA – 6-pin IC
77BA – 7-pin IC

Cylinder Dogging, Exit Alarm, and Delayed Egress Cylinder Specifications

Use DORMA cylinder 90X10SC118.

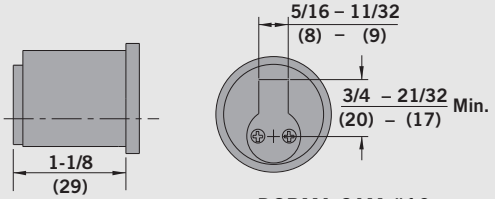

DORMA CAM #10

Optional Electric Functions

Electric Latch bolt Retraction – Specify suffix **ES**. A solenoid concealed in the touchbar assembly provides instantaneous retraction of the latch bolt to allow access from the secure side of the door. Remote control can be accomplished with switching devices such as key switches and card readers that provide a normally open electrical contact. The solenoid is rated for continuous duty, 24 VDC, 14-18 AMP inrush for 200 milliseconds, 1 AMP holding current. **Requires PS501 power supply and ES105 power transfer.** Not available with **C** size device or 9500 mortise exit devices.

Monitor Switch – Specify suffix **MS**. Two micro switches in the touchbar assembly functioning as form C contacts provide local and/or remote notification of two separate appliances when the touchbar is depressed. Each switch is rated for .5 AMP @ 28 VDC maximum.

Latch Monitor – Specify suffix **LM**. A microswitch attached to the device chassis provides local and/or remote notification of the exit device rods and without depressing the touchbar. The single-pole, double-throw switch is rated at .50 AMP @ 28 VDC maximum.

Latch Monitor with Monitor Switch – Specify suffix **LM/MS**. A combination of Latch Monitor and Monitor Switch functions in one device.

Latch Monitor with Monitor Switch and Bypass – Specify suffix **LM/MS BP**. Same as LM/MS above, but an additional single-pole, double-throw switch is triggered by a mortise cylinder for alarm bypass. Cylinder furnished.

PS501 Power Supply

The PS501 Power Supply is capable of powering and controlling (2) 9000 Series Exit Devices with the ES Electric Latch Bolt Retraction feature. Also has the capability of powering (2) additional 9000 Series Exit Devices with an optional card. Specify option **ES2** CARD.

NOTE: The PS501 Power Supply must be used along with the ES105 power transfer to power the ES Electric Latch Bolt Retraction feature.

- Input: 120 volts
- Input circuit protection: 1 AMP circuit breaker
- Output: 24 VDC, 14-18 AMP surge, 2 AMP @ 5 volt continuous, per zone
- Output circuit protection: 4 AMP fuse
- Enclosure: 8" high × 8" wide × 4" deep NEMA 1 Type enclosure for indoor use with hinged cover and knock-outs

Battery Alarm Exit Device

The DORMA 9000 Series exit devices are available with an integral battery powered alarm. The 102 decibel alarm contained in the panic device touchbar and rail assembly activates when the touchbar is depressed and sounds continuously until the device is reset or the battery is completely discharged. Alternatively, a factory-furnished option allows the alarm to sound for four (4) minutes, then automatically rearm.

Furnished with and controlled by a lock cylinder and key, the unit allows ten (10) seconds to exit through the door after arming the alarm, indicated by an intermittently flashing red L.E.D. light in the touchbar. A yellow L.E.D. in the touchbar will flash until manually reset by key to indicate an unauthorized exit even if the alarm has automatically reset.

The unit is furnished with a 9 volt, industrial-grade battery concealed in the end cap assembly for easy replacement. A tamperproof switch will activate the alarm if unauthorized removal of the battery is attempted. Option is available for 12 or 24 volt direct power wiring.

- Specify prefix **BPA** to 9000 Series model number for battery alarm device.
- Specify prefix **BPAR** for 4 minute auto reset battery alarm device.
- Specify prefix **DWA** for direct hard-wired option.
- Size **A** device fits 48" wide door and can be cut to fit 39" wide doors.
- Size **B** device fits 36" wide door and can be cut to fit 33" wide doors.
- Size **C** device fits 30" wide door.

Removable mullions are used with paired doors where a full-width opening is only occasionally required. Doors are fitted with rim exit devices and normally function as single doors. Available in 8' or 10' lengths.

1310 Aluminum Mullion

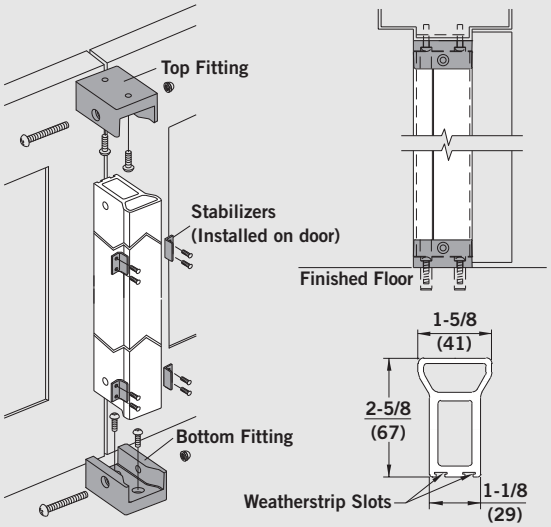

- Meets demands of heaviest use areas.
- Durable extrusion.
- Supplied with wood/machine screws and anchors.

1310 - 8 - 8' mullion
1310 - 10 - 10' mullion

WS1310 - 8 - 8' mullion with weatherstrip
WS1310 - 10 - 10' mullion with weatherstrip

Finish:
Aluminum: 628 (Satin).
Bronze: 695 (Dark).

1330 Steel Mullion

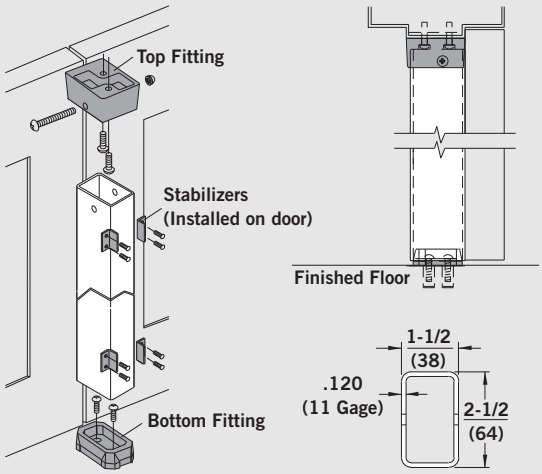

- Ideal for high-abuse areas such as schools.
- Meets demands of heaviest use areas.
- Heavy-gauge, smooth-surface steel construction.
- Attractive tube shape with rounded corners.
- Supplied with wood/machine screws and anchors.

1330 - 8 - 8' mullion
1330 - 10 - 10' mullion

Finish:
Prime: 600.

F1300 Steel Mullion

- For use with U.L. listed fire exit devices.
- Meets demands of heaviest use areas.
- Large top and bottom fittings for extra strength.
- Heavy-duty tube with rounded corners.
- Standard 8' length.
- Supplied with wood/machine screws and anchors.

F1300 - 8 - 8' fire-rated mullion
1300 - 8 - 8' non-fire-rated mullion
1300 - 10 - 10' non-fire-rated mullion

Finish:
Prime: 600.

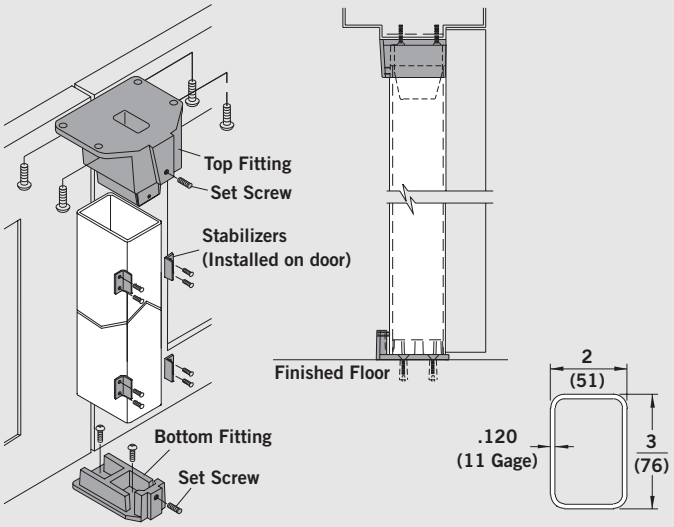

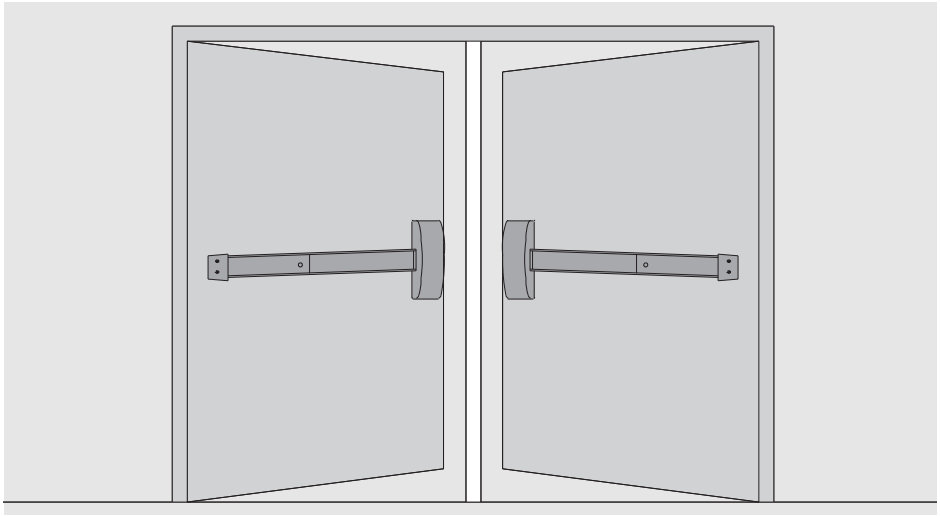

Note: When using a mullion, refer to exit device template for minimum stile and vertical reference dimensions.

F1340KR Key Removable Steel Mullion

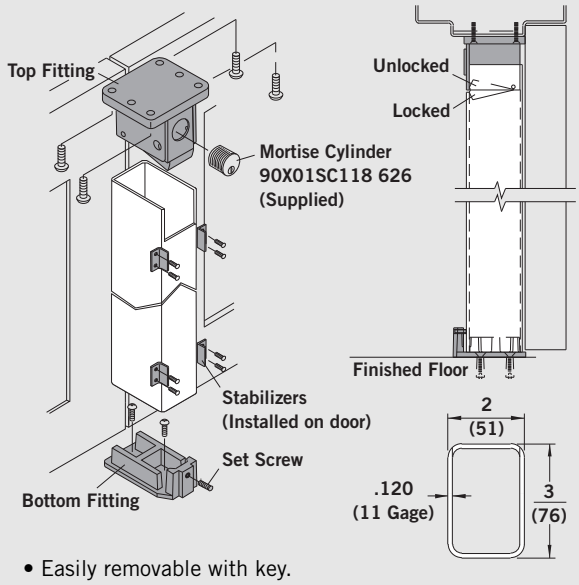

- Easily removable with key.
- Keying is standard 1-1/8" mortise cylinder with 01 (AR) cam.
- For use with U.L. listed fire exit devices.
- Meets demands of heaviest use areas.
- Large top and bottom fittings for extra strength.
- Heavy-duty tube with rounded corners.
- Standard 8' length.
- Supplied with wood/machine screws and anchors.

F1340KR - 8 - 8' fire-rated key removable mullion
1340KR - 8 - 8' non-fire-rated key removable mullion
1340KR - 10 - 10' non-fire-rated key removable mullion

Finish:
Prime: 600.

Optional DORMA SFIC:
96D01BA138 – 6-pin IC
97D01BA138 – 7-pin IC

HC1300 Steel HC Mullion

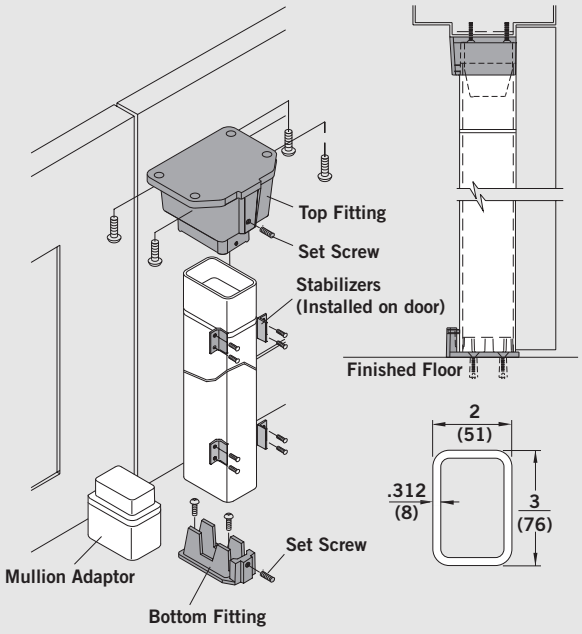

- For use with pairs of hurricane-rated rim devices on openings up to 8'0" × 8'0".
- 80 psf design pressure rating positive/negative deflection with HC9300 rim device.
- Tested to Miami-Dade TAS 201, 202, 203.
- Large top and bottom fittings for extra strength.
- Heavy-duty tube with rounded corners.
- Standard 8' length.
- Supplied with appropriate screws and anchors.

HC1300 - 8 - Heavy-duty 5/16" wall HC mullion*

Finish:
Prime: 600.

*For other HC mullions, consult factory

Sex Nuts

The information below serves as a simple reference when specifying DORMA 9000 Series exit devices and trim.

9100/F9100	3 packs
9100/F9100 w/trim	1 pack
9300	3 packs
F9300	4 packs
9300/F9300 w/trim	1 pack
9400/F9400	6 packs
9400/F9400 w/trim	4 packs
9500/F9500	3 packs
9500/F9500 w/trim	1 pack

Non-functioning Exit Devices

The non-functioning exit device looks exactly like the 9000 Series, but has no latching mechanism. Units can be furnished in standard **A** or **B** width or cut to special size when door width is specified. Order any applicable trim for push/pull function. Choose the type of operation required.

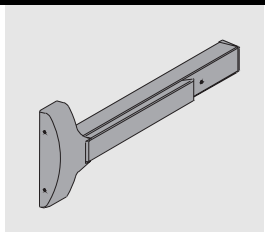

9035 Rigid Touchbar Device –
Touchpad is permanently fixed and immobile.

9036 Moveable Touchbar Device –
Same as 9035 rigid touchbar device, but touchbar is moveable. Similar to standard 9000 Series device.

9036MS Moveable Touchbar Device with Microswitch –
Same as 9036, but includes microswitch that can be used to control electromagnetic locks, electric strikes, or other electronic appliances.

Dummy Bar

The dummy bar is designed as a companion to 9000 Series devices. Units consist of the touchbar assembly only and do not include the device chassis or chassis cover. Door width must be specified.

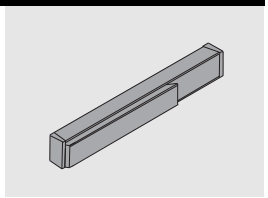

9030 Rigid Dummy Bar –
Touchbar only. Touchpad is permanently fixed and immobile.

9030MS Dummy Bar with Microswitch –
Touchbar is moveable and activates included microswitch. Can be used to control electromagnetic locks, electric strikes, or other electronic appliances.

GK9000 Glass Lite Shim Kit

GK9000 Glass Lite Shim Kit –
Contains two 1/8" thick shims. Permits shimming of the exit device maximum 1/4" off door face without affecting U.L. listing. Designed to accommodate glass lite installed in door. Furnished bright zinc plated. Optional finishes available, consult factory.

Conversion Kits

The following conversion kits are the same as options detailed elsewhere in this brochure, but in kit form with required components and installation instructions for field installation/retrofit.

MS Kit – Monitor Switch in Touchbar Kit
BPA Kit – Battery Powered Exit Alarm Kit
BPAR Kit – Battery Powered Exit Alarm, 4 Minute Reset Kit
DWA Kit – Direct Wired Alarm Kit
CD Kit – Cylinder Dogging Kit (less cylinder)

Security Screws

For applications where tamper-resistant security screws are required, specify **TX**. **Note:** Special screw bits are required.

DORMA Group
North America
www.dorma-usa.com

DORMA Architectural Hardware
DORMA Drive, Drawer AC
Reamstown, PA 17567-0411
Telephone: (800) 523-8483
Facsimile: (800) 274-9724
E-mail: archdw@dorma-usa.com

DORMA Canada
1680 Courtney Park Drive, Unit 13
Mississauga, Ontario L5T 1R4
Telephone: (800) 387-4938
Facsimile: (905) 670-5850
E-mail: sales@dormacanada.com

DORMA Mexico, S. de R.L. de C.V.
Astrónomos 28, Col. Escandón
México, D.F. 11800
Del. Miguel Hidalgo
Telephone: (52+55) 5272-6937
Facsimile: (52+55) 5272-6948
E-mail: operacion@dorma.com.mx

Subject to change without notice 11.08CT 3M USA 07000307