232-iLM Keypad

Specifications:

Case Dimensions:
6 1/2”L x 1 3/4”W x 1 1/8”D

Electrical:
5-12 VDC Only - reader
12-24 VDC/VAC - controller

Current Draw:
120ma maximum@ 12VDC

Temperature Tolerance:
-20ºF to 130ºF

Features:

- **Sealed For Indoor or Outdoor Applications**
- **LED’s For Relay Status Indication**
- **Bell Output**
- **Surface mount**
- **Illuminated hardened keys**
- **Rated at greater than one million key cycles**
- **Two Piece Design Creates a Secure Installation**

Use It:
- **From light to Medium/Heavy duty applications**

Applications:
- **Low-Medium/Heavy Traffic Use**
- **Rough Service Environments**
- **Mullion Frame Mounting**

For use with the following:

- IEI Self Contained Access Control.

Functionality:
Combining elegant looks and mullion mount design in a rugged case, IEI’s new Open Technology Series Mullion keypad can be utilized for most applications. Designed to perform in meduim-high traffic and rough duty environments, the IEI Open Technology Series Mullion has hardened backlit keys. Encapsulated electronics makes the Mullion keypad suitable for indoor and out-door installations . The keypad is activated by entering any 1-6 digit programmed code followed by the star * key. IEI also offers the Open Technology Series Mullion keypad as model SS-iLM, a keypad only version for use with an IEI controller or in 26 Bit Wiegand applications.

Packing List: (232-iLM)

IEI Open Technology Mullion keypad	(1)
IEI 232 Controller	(1)
Eight conductor wire harness	(1)
Three conductor wire harness	(4)
Hardware package for controller	(1)
8 x 1 1/4” Panhead Machine screws	(2)
8 x 1 1/4” Panhead wood/sheet metal screws	(2)
6 x 32 5/64 allen head screw	(1)
5/64” Allen wrench	(1)
Instruction manual w/template	(1)

Wire Harness Configuration

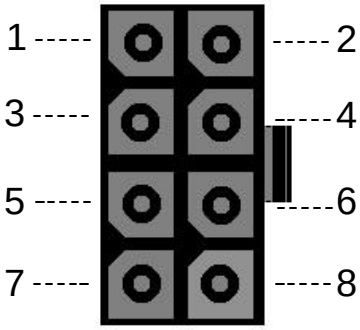

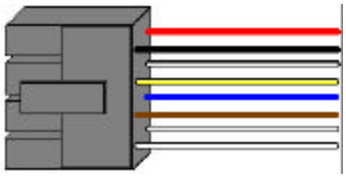

Pin	Wire color	Signal name
1	Red	V in (+)
2	Black	V in (-)
3	White/Black	Data 0
4	White/Yellow	Data 1
5	Blue	Not used
6	Brown	Not used
7	White	Bell Relay Contact (A)
8	White	Bell Relay Contact (B)

Wire Requirements:
Maximum distance with 6 conductor ***shielded*** :
18 AWG - 1000’
20 AWG - 500’
22 AWG - 250’

605 0800 rev 1.0

To Install the Mullion keypad:

Step 1: **• Use the template provided on last page to accurately mark the holes needed for mounting. Drill the mounting holes with a 11/64 drill bit, also drill the hole for the wire run (size undetermined). Attach the mounting bracket to the mounting location.**

Step 2: **• Be sure to strip back the insulator from the wire run, and tape the shield to the jacket.**
• Connect the eight conductor harness to the Open Technology Series Keypad to the four conductor for an IEI controller as shown in the diagrams below.

Step 3: **• Place the Mullion keypad on the bracket, and secure with the provided allen head screw. For added security, the 6 x 32 5/64" allen head screw maybe replaced with any head style that you choose (i.e spanner head, allen with pin, etc..).**

Wiring the Door-Gard Mullion Keypad to an IEI Controller

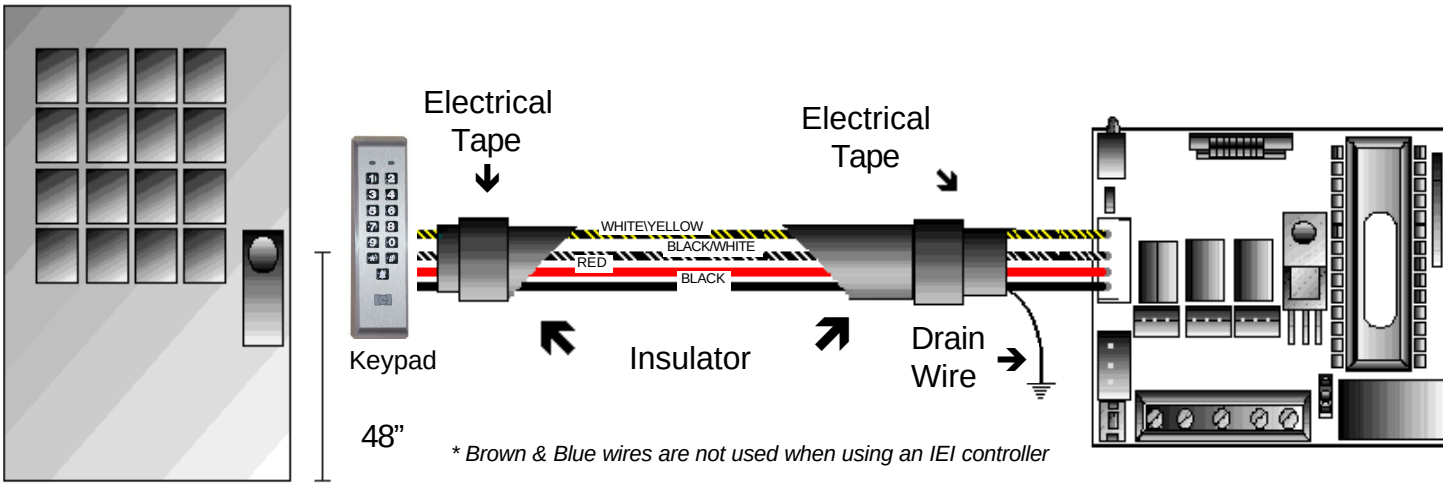

The controller should be mounted in a secure location that is not exposed to the elements. It is recomended that a filtered and regulated power supply be used to power the controller. This will greatly increase the performance and reliablity of the product.
Wiring the 232-ILM to an IEI Control unit requires a four conductor, stranded and **shielded** cable to be wired between two units. Maximum lengths are as follows:

22 AWG stranded : 250 feet
20 AWG stranded : 500 feet
18 AWG stranded : 1000 feet

At the Controller, connect the four conductor cable to the four pin connector on the Controller's relay board, as shown in the diagram above. The drain wire at the Controller must be attached to ground. Ground is the V- terminal on TS1 of the controller if the power supply is grounded. At the mullion keypad, the drain wire and foil shield should be cut back with the insulator and taped with electrical tape. The eight conductor harness connects into the eight pin connector on the mullion keypad. Both wire harnesses are connected to each other, color to color, as shown above.

Wiring an IEI CONTROLLER

Basic Access Control with an Electromagnetic Lock

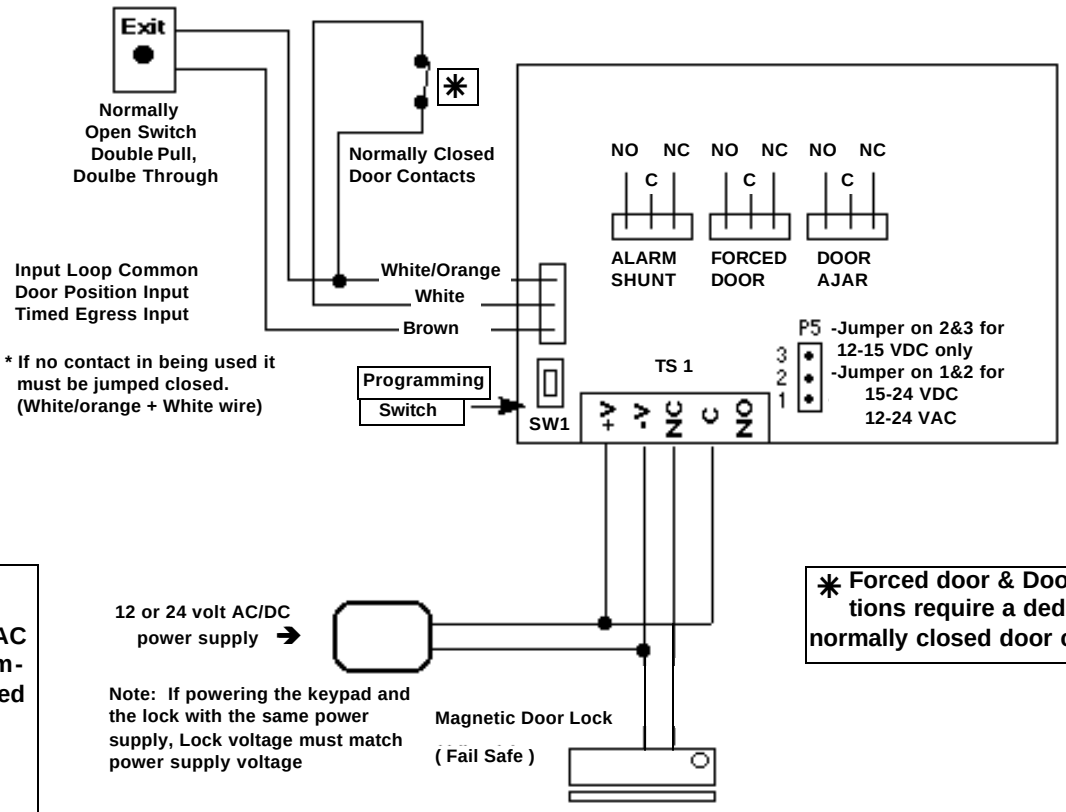

TECH TIP: Although the unit will operate with AC voltage, it is recommended that filtered and regulated DC voltage is used to increase system reliability.

✳ Forced door & Door Ajar functions require a dedicated set of normally closed door contacts.

Basic Access Control with an Electric Door Strike

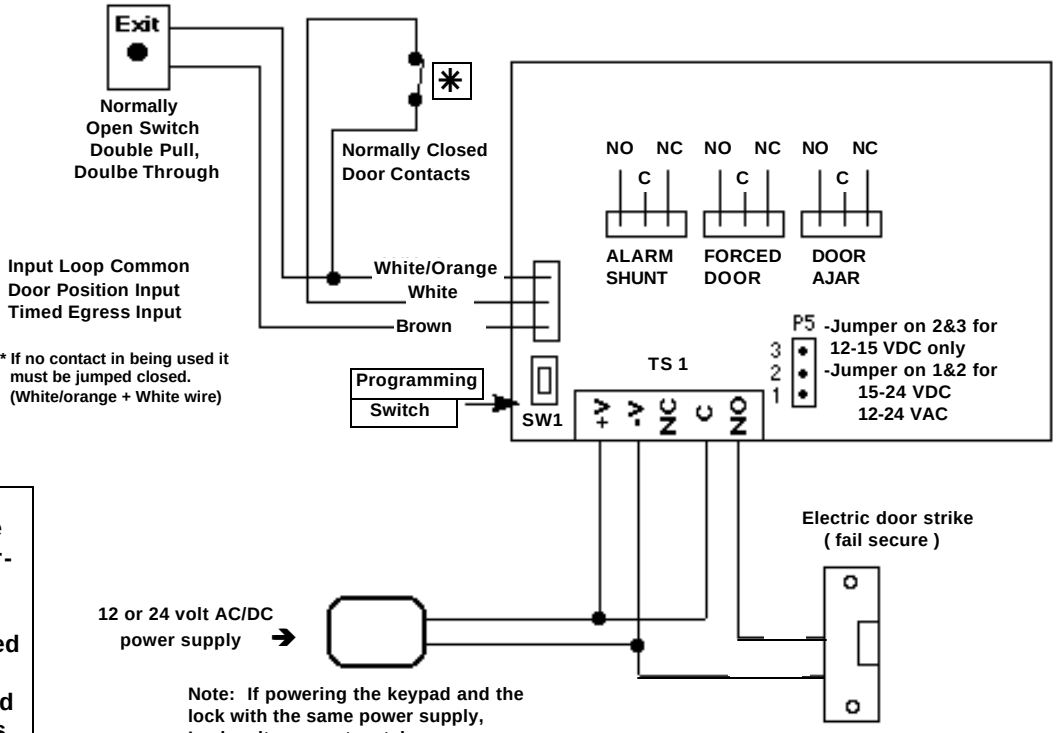

✳ Forced door & Door Ajar functions require a dedicated set of normally closed door contacts.

TECH TIP: Although the unit will operate with AC voltage, it is recommended that filtered and regulated DC voltage is used to increase system reliability.

Wiring an IEI CONTROLLER

Integrated Access Control with an Electromagnetic Lock

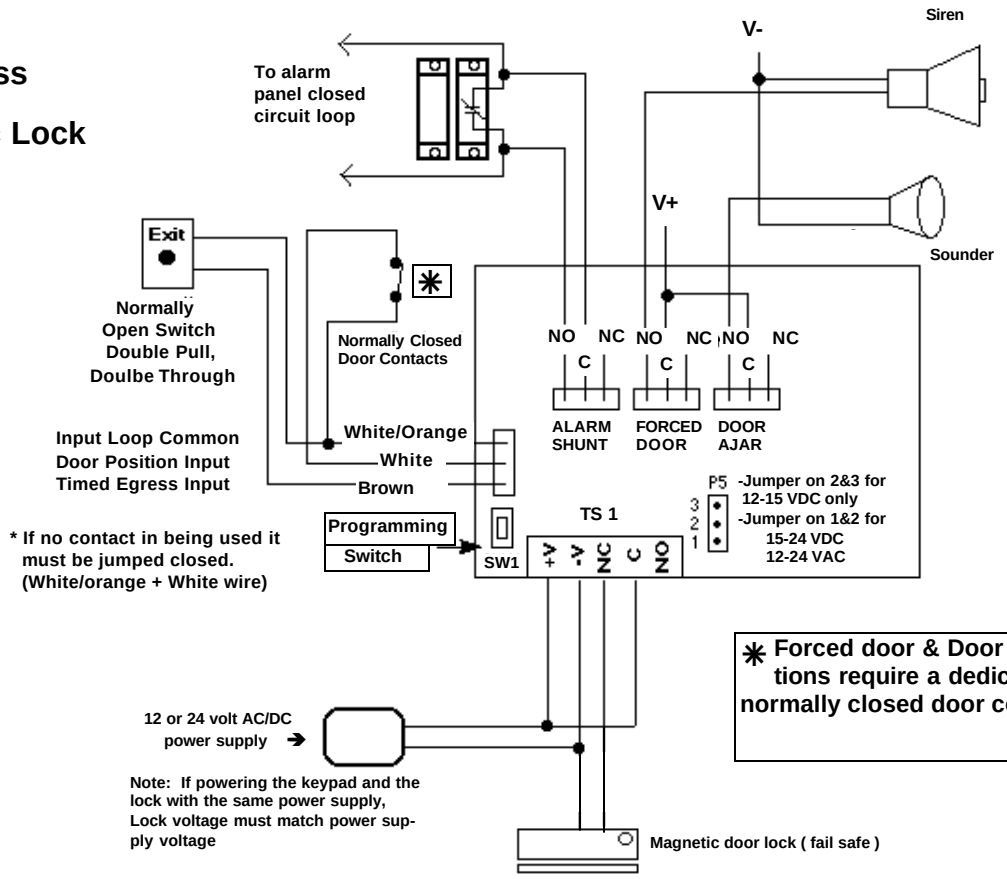

TECH TIP:
Although the unit will operate with AC voltage, it is recommended that filtered and regulated DC voltage is used to increase system reliability.

✳ Forced door & Door Ajar functions require a dedicated set of normally closed door contacts.

Integrated Access Control with an Electric Door Strike

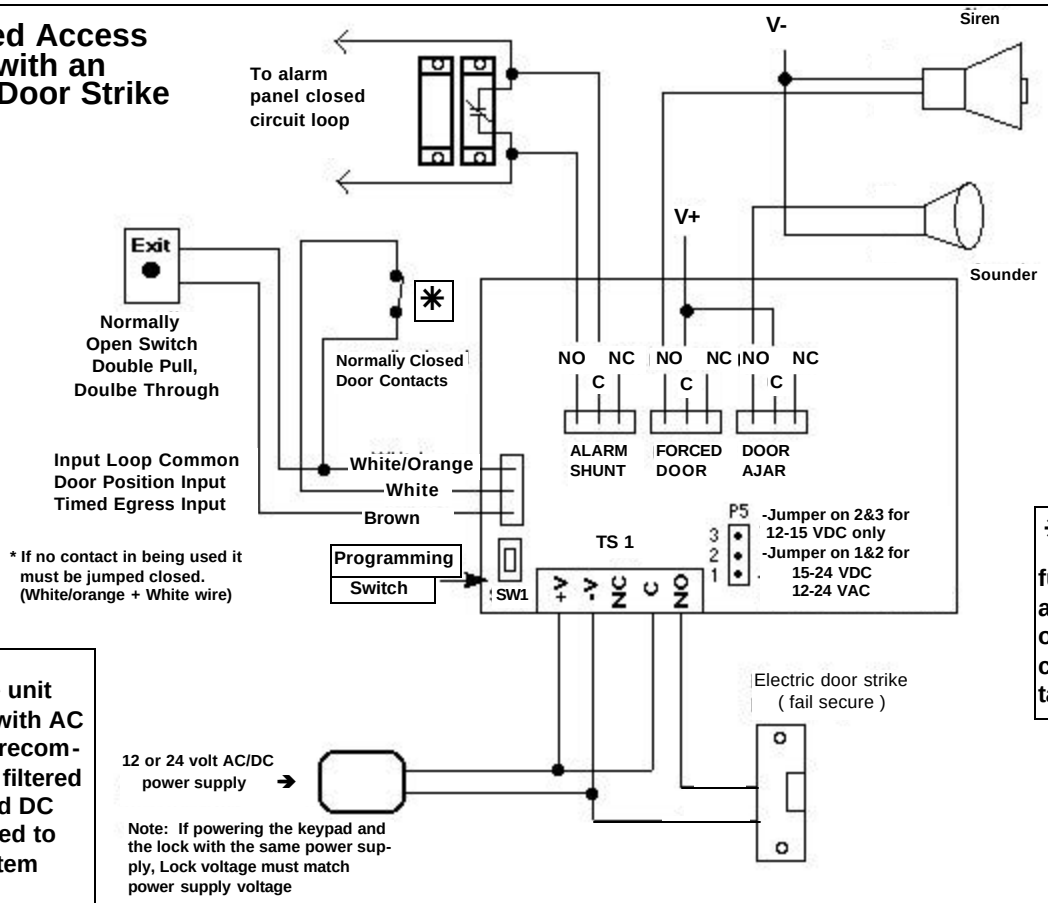

TECH TIP:
Although the unit will operate with AC voltage, it is recommended that filtered and regulated DC voltage is used to increase system reliability.

✳ Forced door & Door Ajar functions require a dedicated set of normally closed door contacts.

Wiring the bell output to a speaker

With the 232-iLM you can use the bell button to trigger an external device such as a door bell or like devices that require a momentary closer to operate. This is easily accomplished by either using the dry contact provided or you can run 12 through 24 volts AC/DC through one leg of the bell output (A) and connecting the other leg (B) to the power in on your device. Then connect the negative connection on your device to the negative on your power supply (as shown below).

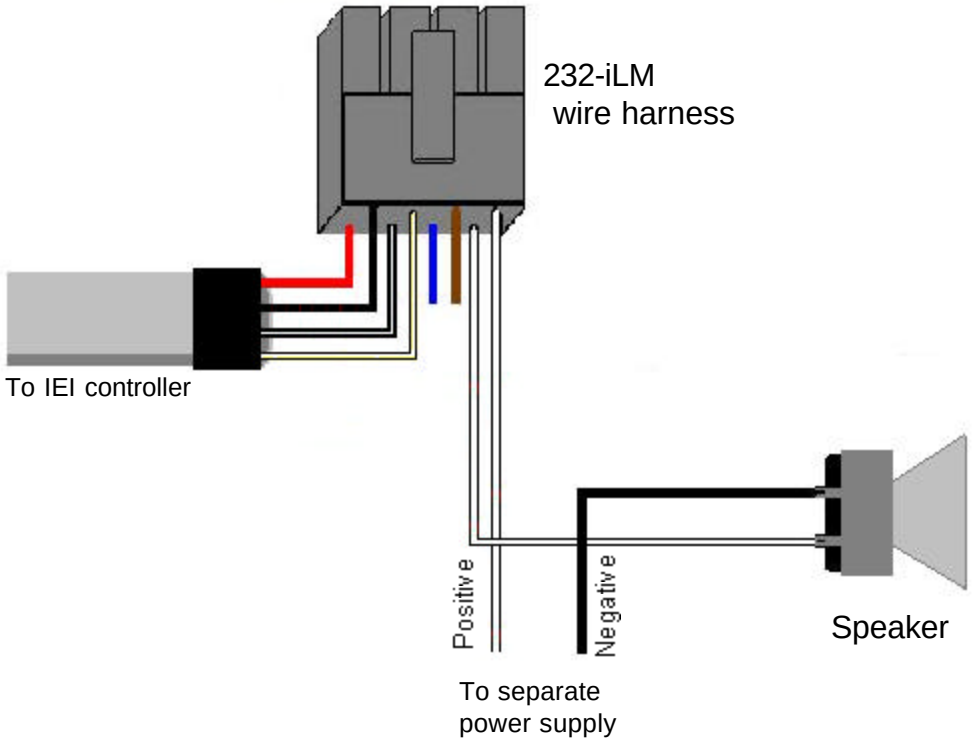

System Defaults:
The Open Technology Mullion Keypad is designed for easy installation in a minimum amount of time. The following default values have been factory programmed.

Front End Designation	**HFE** (Hub Front End)
Mullion Keypad Program Code	**6789**
Audible Key Press Feedback	**On**
Visual Key Press Feedback	**On**
Log Event Recording	**IN**
Keypad illumination	**Enabled**
Keypad Dimming	**Enabled**
Door bell select	**Enabled**
Door bell duration	**Continuous**
Backlighting	**Dims 15 seconds after last key-press**

Controller Defaults:

Main relay	**5 seconds**	Master code	**1234**
Forced door	**10 seconds**	Door ajar	**30 seconds**
Keypad Active	**OFF**	Keypress feedback	**ON**
Auto Entry	**OFF**		

If it is necessary to change any of these defaults, please refer to the Programming Options Chart on page 6.

Self Test: While the unit is powered up, enter the following on the Mullion keypad: **7890#123456*.** If all 12 keypresses have been verified, the keypad will enter self test mode. The LED's will alternate three times and the sounder will beep three times followed by a flickering yellow LED. Press any key to return to normal operation.

Programming The 232-iLM

All programming is controlled by a unique Master Programming Code.

Components Requiring Programming:

- **Open Technology Mullion Keypad (default program code- 6789)**
- **IEI 232 Controller (default Master Code 1234):** All PIN number additions, deletions, access to control functions.

Open Technology Mullion Program Options Chart

To Enter program mode: 099 # "program code" * ***(Default program code 6789)***

The keypad's yellow LED will flash twice rapidly indicating that you are in program mode.

OPTION	ENTER COMMAND ON 232 iLM KEYPAD
Change Program Code	90 # 0 # 0 # "new code" * "repeat code" *
Visual Key-press feedback on	91 # 0 # 1 # * *
Visual Key-press feedback off	91 # 0 # 0 # * *
Audible Key-press feedback on	91 # 1 # 1 # * *
Audible key-press feedback off	91 # 1 # 0 # * *
Default Mullion keypad to IEI Controller mode	96 # 0 # 0 # * *
Default Mullion keypad to 26 bit Wiegand mode	96 # 1 # 1 # * *
Programming the Bell output	
To enable the door bell feature	91 # 13 # 1 # * *
To diable the door bell feature	91 # 13 # 0 # * *
To set door bell duration	92 # 4 # (Time) # * * (time must be set in a two digit format, 01-99)
To set door bell to continuous	90 # 4 # 0 # * *

While you are programming, the * key represents a funtion similar to enter. After the * key is pressed the first time during the command, the yellow LED will speed up. After you press the * key a second time, the yellow will return to a slow flash. If the yellow LED comes on solid while programming, this is an indication of an error. Press the * key once, this should clear error and return to a slow flash, allowing you to re-enter the last programming command.

TO PROGRAM USERS AND CONTROLLER OUTPUT FUNCTIONALITY, PLEASE REFER TO THE "SELF CONTAINED ACCESS CONTROL FEATURES AND PROGRAMMING GUIDE" FOR A COMPLETE EXPLANATION AND HOW TO INSTRUCTIONS.

System Defaulting the Open Technology Mullion via wiring

If the four data wires are shorted in one of the two configurations shown below on power up, the option will be set. Remove power after you hear the 3 beeps then reconnect the data lines to their proper working configuration.

Defaults Mullion and sets it in IEI Controller Front End mode.

Red	- +12VDC
Black	- GND
Wht/Blk	
Wht/Yel	
Blue	
Brown	

Defaults Mullion and sets it in Wiegand 26 bit mode.

Red	+12VDC
Black	- GND
Wht/Blk	(DAO)
Wht/Yel	(DA1)
Blue	(LED 1)
Brown	(Not Used)

If the local program code is lost or forgotten, power down the system, connect the wire harness as shown below then power the system up. Change your local program code then power down the system and restore the wire harness to its original configuration and power back up.

Red	- +12VDC
Black	- GND
Wht/Blk	- No connection
Wht/Yel	
Blue	
Brown	

If this product does not seem to operate properly, please have your product model number ready and call our Technical Department toll free at 1-800-343- 9502 or within MA (781-821-5566) Monday -Friday 8:00 am-7:00 pm EST.

We understand your time is valuable, and we know that calling our Technical Support Department will ensure that you'll make the most profit possible with your IEI product. Thank you for your purchase. We appreciate your business.

INTERNATIONAL ELECTRONICS, INC ™

INTERNATIONAL ELECTRONICS, INC.
427 TURNPIKE STREET, CANTON, MA 02021 U.S.A.
800-343-9502, 781-821-5566
781-821-4443 (FAX)
FAX INFORMATION CENTER 781-821-0734 (FROM YOUR FAX MACHINE)

Visit our website for Access Control & Glassbreak information,
New Products, Specifications, Applications, Seminars, and Partners
@ **www.ieib.com**

Mounting Template for iLM

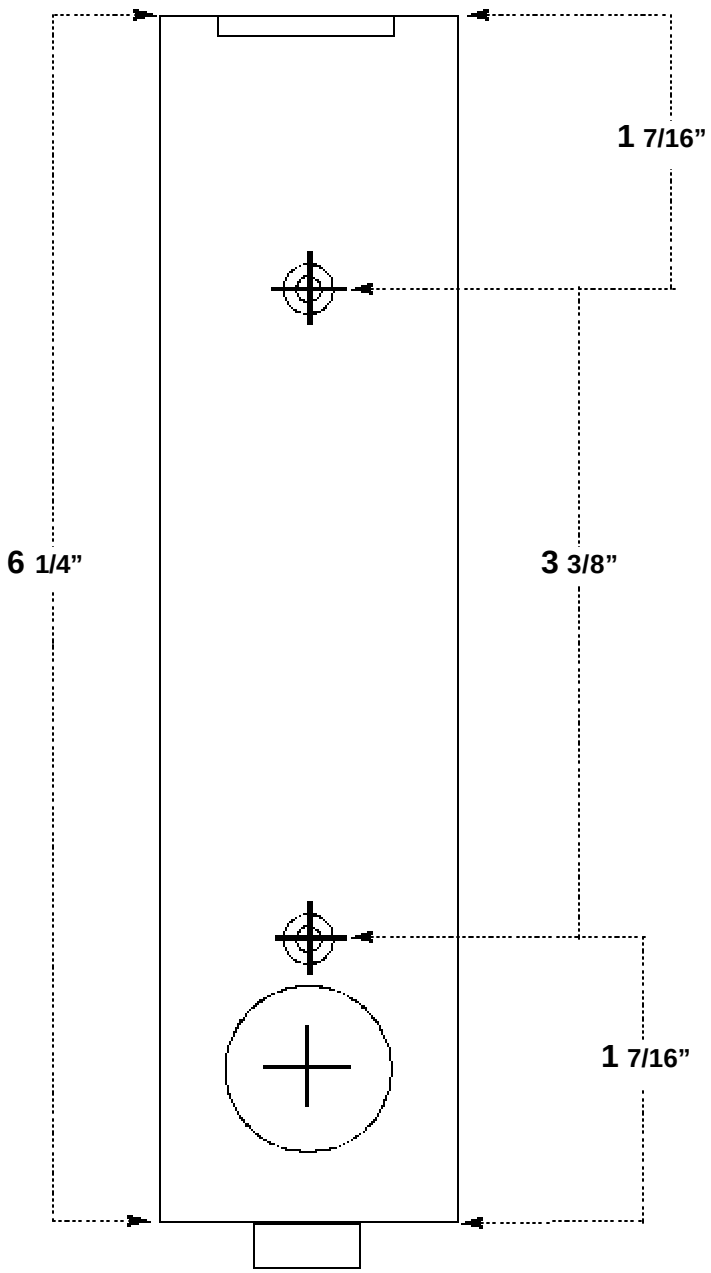

Diameter of the mounting holes	-11/64”
Diameter of the wiring hole	-7/8”

This product is designed as a surface mountable product. The access hole for the wires is determined by the amount of wires that will run through the mounting surface.