SECURITRON
ASSA ABLOY

Securitron DKC
Digital Keypad Controller

Stand-Alone 2-Door Controller for a Flexible, Secure System

The DKC Digital Keypad Controller provides stand-alone control of up to two electrically locked doors. Adding door users is fast and simple, either upload via easy-to-use software or program directly from an installed system keypad. The DKC offers broad flexibility and ease of use for access control professionals looking for a cost-effective solution for small, simple configurations.

A new, easy-to-use software Programming Tool with upload feature allows quick deployment of a two-door, stand-alone system with the flexibility to use any output reader or keypad capable of 26-bit Wiegand output. The DKC is also compatible with the ASSA ABLOY Aperio® series of wireless products. It communicates with an Aperio Wiegand hub in place of an electronic access control system.

Choose from high quality Securitron options, wireless ASSA ABLOY Aperio products, or connect to HID® proximity or smart card readers for sophisticated yet simple access control.

DKC
Digital Keypad Controller

SECURITRON
ASSA ABLOY

Electrical:
12/24VAC or DC; Minimum 1A supply for the base unit, add supply current for any devices connected to the DC outputs

Dimensions:
6"W x 8"H x 3"D

Operating Temperature:
+32 to +158F [0 to +70C]

Shipping Weight:
1.75lbs [0.8kg]

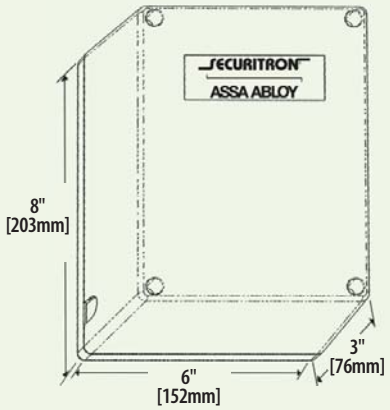

Aperio® Wireless Technology

Available across a range of locking hardware from ASSA ABLOY Group brands, Aperio technology provides the flexibility to address a variety of applications throughout a facility. Using high security standardized communications to ensure data security, Aperio is fully-encrypted AES 128 wireless communication between the Aperio lock and hub. To learn more, visit intelligentopenings.com/Aperio

aperio

PRODUCT FEATURES & BENEFITS

- Supports any keypad or card reader capable of 26-bit Wiegand output
- Compatible with the ASSA ABLOY Aperio® family of wireless products
- Downloadable audit trail for time/date stamped user access
  - *Stores up to 2000 total events*
- New, easy-to-use, intuitive remote programming option
  - *Enter codes from the comfort of the administrator's desk using the DKC Programming Tool for later upload to the controller*
  - *Optional easy keypad programming at the keypad or the controller board*
- Independently controls up to two doors
- Up to 250 users per door
- Non-volatile memory for fast recovery in power outages with no data loss
- User code and/or hard code disable feature
- 5 Amp DPDT relay output for lock control and alarm shunt, camera call-up or other device interface, REX input
- MagnaCare Lifetime Replacement No Fault Warranty

SAMPLE CONFIGURATIONS & APPLICATIONS

The DKC provides stand-alone control of up to two electrically locked doors. Add a power supply such as Securitron AccuPower® for a cost-effective solution for small applications.

	Door One	Door Two
DKC for small business	Adams Rite A100 Aperio keyless entry control operating with an Adams Rite lock *Small business front door*	Securitron DK-37 keypad operating with an electronic lock *Small business employee entrance*
DKC for school health services office	Securitron DK-38 keypad operating with an electronic lock *School health storage room*	HES K100 Aperio cabinet lock *School health medication cabinet*
DKC for professional office suite	HID® proximity card reader operating with a Securitron M32 Magnalock® *Suite entrance*	HES RF8500 integrated electric strike *Individual office entrance*
DKC for research facility mantrap	HID iCLASS® credential reader operating with a Securitron M680 Magnalock *Mantrap entrance*	HES IC1006 integrated electric strike *Lab entrance*

SMC-020-06/13