ELECTRICAL DATA SHEET

THIS PRODUCT IS AN ELECTROMAGNETIC HOLDING DEVICE INTENDED FOR USE IN A DRY INTERIOR ENVIRONMENT FOR FIRE DOOR APPLICATIONS BUT CAN BE USED FOR OTHER MAGNETIC APPLICATIONS.
WIRE INTO PROPER TERMINALS AS NOTED BELOW:

PLEASE READ INSTRUCTIONS CAREFULLY!!

SERIES	MODEL	* VOLTAGE	mA	VA	TERMINALS
2500	2510	24 AC/DC	105	1.26	Com & 24 v

* INPUT CURRENT SHALL NOT EXCEED THE MARKED RATING

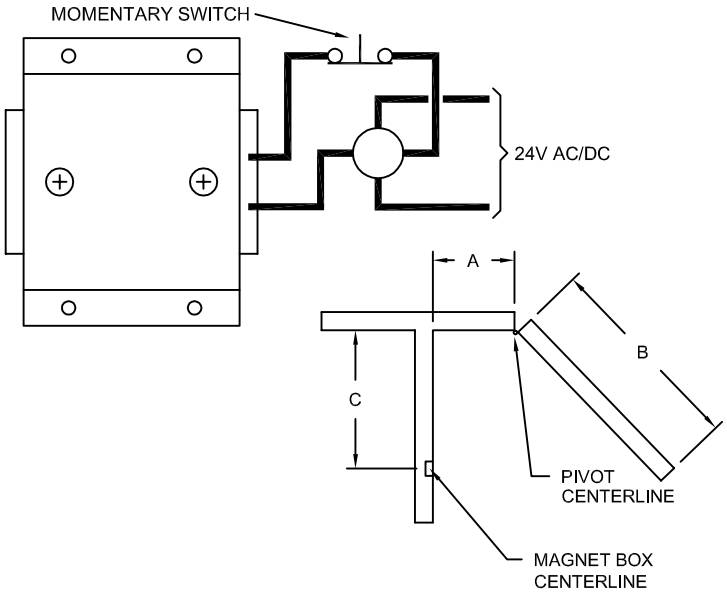

ELECTROMAGNETIC DOOR HOLDER

ASSEMBLY INSTRUCTIONS
&
ELECTRICALS CONFIGURATIONS

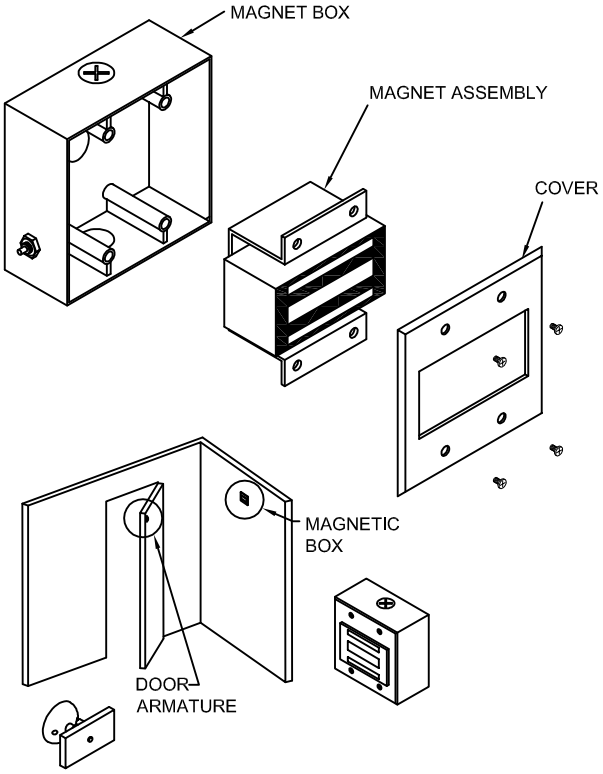

ALL SPECIFICATIONS SUBJECT TO CHANGE WITHOUT NOTICE. INFORMATION FURNISHED BY ARCHITECTURAL BUILDERS HARDWARE MFG, INC. (ABH) IS BELIEVED TO BE ACCURATE AND RELIABLE HOWEVER, NO RESPONSIBILITY OR LIABILITY IS ASSUMED BY ABH FOR ITS USE NOR FOR ANY INFRINGEMENT OF PATENTS OR OTHER RIGHTS OF THIRD PARTIES WHICH MAY RESULT FROM ITS USE. NO LICENSE IS GRATED BY IMPLICATION OR OTHERWISE UNDER ANY PATENT OR OTHER RIGHTS OF ABH.
2004 Architectural Builder Hardware Mfg., Inc. All right reserved

2510-1-03.DWG

www.abhmfg.com
E-mail: abhinfo@abhmfg.com
Architectural Builders Hardware Mfg., Inc.
1222 Ardmore Ave., Itasca, IL 60143
630.875.9900; FAX 800.9FAXABH (932.9224)

©2013 ABH Mfg., Inc.
printed in USA

2510

REVISED 03-27-13

Step #1 Locations of Magnet Box:

1-1 Measure distance from pivot centerline to wall (DIM A)
1-2 Determine door width (DIM B).
1-3 To locate magnet box use Table below.
1-4 DIM C is the distance from the pivot centerline to the magnet box centerline.
Example: DIM A = 10" DIM B = 42" RESULT: DIM C = 39"
1-5 If DIM A or DIM B intersect in the shaded area, DO NOT install magnet box: The
Example 2: DIM A = 7" DIM B = 36" Estimated DIM C = 33-1/8"
1-6 If DIM A and DIM B intersect in the shaded area, DO NOT install magnet box: The degree of door opening will not permit proper alignment between armature and wall magnet.
1-7 Suggseted height 2'0" to 4'0" from the floor and/or not over 6'0".
1-8 Check degree of door opening shown in table and coordinate with door closers and other door hardware.
1-9 Total projection of door hardware must not be more than 4-1/2" on the pull side of door.

DIM B	28		30		32		34		36		38		40		42		44		46		48	
DIM A	DIM C	DEG	DIM C	DEG	DIM C	DEG	DIM C	DEG	DIM C	DEG	DIM C	DEG	DIM C	DEG	DIM C	DEG	DIM C	DEG	DIM C	DEG	DIM C	DEG
2	25-1/4	84	27-1/4	85	29-1/4	85	31-1/4	85	33-1/4	86	35-1/4	86	37-1/4	86	39-1/4	86	41-1/4	87	43-1/4	87	45-1/4	87
4	25-3/8	89	27-3/8	89	29-3/8	89	31-3/8	89	33-3/8	89	35-3/8	89	37-3/8	89	39-3/8	89	41-3/8	89	43-3/8	89	45-3/8	89
6	25-3/8	93	27-3/8	93	29-3/8	93	31-3/8	93	33-3/8	93	35-3/8	92	37-3/8	92	39-3/8	92	41-3/8	92	43-3/8	92	45-3/8	92
8	25-1/8	98	27-1/8	97	29-1/8	97	31-1/8	96	33-1/4	96	35-1/4	96	37-1/4	95	39-1/4	95	41-1/4	95	43-1/4	95	45-1/4	94
10	24-3/4	103	26-7/8	102	28-7/8	101	30-7/8	100	32-7/8	99	35	99	37	98	39	98	41	98	43	97	45	97
12	24-1/4	107	26-3/8	106	28-3/8	105	30-1/2	104	32-1/2	103	34-5/8	102	36-5/8	102	38-5/8	101	40-3/4	100	42-3/4	100	44-3/4	100
14	23-1/2	112	25-5/8	110	27-3/4	109	29-7/8	108	32	107	34-1/8	106	36-1/8	105	38-1/4	104	40-1/4	103	42-3/8	103	44-3/8	102
16	22-5/8	117	24-7/8	115	27	113	29-1/4	112	31-3/8	110	33-3/4	109	35-3/4	108	37-5/8	107	39-3/4	106	41-7/8	105	43-7/8	105
18	21-1/2	122	23-7/8	120	26-1/8	117	28-3/8	115	30-1/2	114	32-3/4	112	34-7/8	111	37	110	39-1/8	109	41-1/4	108	43-3/8	107
20					25	122	27-1/4	120	29-1/2	118	31-3/4	116	34	115	36-1/4	113	38-3/8	112	40-1/2	111	42-5/8	110
22									28-3/8	122	30-3/4	120	33	118	35-1/4	116	37-1/2	115	39-3/4	114	41-7/8	113
24											29-3/4	123	31-7/8	121	34-1/4	120	36-1/2	118	38-3/4	117	41	115
26															33	123	35-3/8	121	37-5/8	120	40	118

Step #2 INSTALLATION OF IN-WALL MAGNET BOX:

2-1 Locate on the wall the dimension DIM C by tracing a temporary vertical line at the distance DIM C (calculated in the previous page) from te corner of the wall.
2-2 Proper electrical wire routing must be done before installing magnet box.

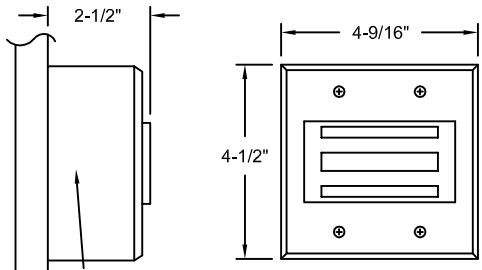

4-9/16 x 4-1/4 x 2 outlet box: should be mounted with reinforcement to withstand load from door

Step #2 Continued:

2-3 The 4-9/16 x 4-1/4 x 2-1/2 outlet box must be installed in the wall in such a way that the center line of the outlet box coincides with the created in step 2-1.
2-4 The box should be installed with reinforcement to withstand a minimum 400 lbs. pull.
2-5 The height of the outlet box must be chosen so the door armature can be installed at the same height on the door without interfering with the other door hardware.
2-6 Install and verify the proper bracket and cover alignement.
2-7 For detail on electrical wiring, read the specific "Electrical Data Sheet" at the end of this documentation.

SCREW DETAIL		
	QTY	SCREW
MAGNET ASSY & COVER TO ELECTRICAL B OX	4	#6-32 X 3/4" OVAL HD MS
ARMATURE	2	#10-32 X 1" PAN HD MS #10-32 X 1-1/4" SNB

Step #3 INSTALLATION OF DOOR ARMATURE:

3-1 With the magnet box secureely fastened, aligned and energized, place and center the door armature on the surface of the magnet with the two holes of the base aligned either vertically or horizontally.
3-2 Gently close the door and adjust the angle of the door armature so the base lays flat againt the door.
3-3 While keeping slight pressure on the door, mark location of the door armature through the two base holes. The two marks should be 1-3/4" apart and the center line of the door armature should be approximately 2-5/8" from the lock edge of the door.
3-4 Drill through the door where the two marks are located with a 5/16" drill.
3-5 Mount the door armature on the door: Use two #10-32 screws with two #10-32 x 1-1/4" sex bolts.

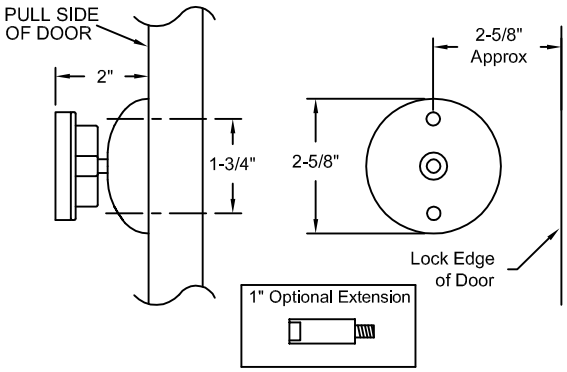

2510-2-02.DWG

® www.abhmfg.com
E-mail: abhinfo@abhmfg.com
Architectural Builders Hardware Mfg., Inc.
1222 Ardmore Ave., Itasca, IL 60143
630.875.9900; FAX 800.9FAXABH (932.9224)

© 2013 ABH Mfg., Inc.
printed in USA

2510

REVISED 03-27-13